Welcome to the T Level Engineering & Manufacturing

The webinar will begin shortly

November 2022

Engineering and Manufacturing T Level

A high-level overview of the Maintenance, Installation & Repair for Engineering and Manufacturing Pathway

T-LEVELS | Institute for Apprenticeship & Technical Education

City & Guilds | eal

Using the webinar platform

Our action plan supports the planning and delivery stages to prepare for the TQ launch

Send any questions in the question area throughout the webinar

All attendees will be set to mute

Webinar resources will be shared on our website shortly after

Agenda

- Welcome
- Engineering & Manufacturing T Level
- Engineering & Manufacturing T Level pathways
  - Maintenance, Installation and Repair Occupational Specialisms
  - Specifications
  - Website navigations
  - Resources for Maintenance, Installation and Repair Pathway
  - TQ scheme of assessment
- **Employer Set Project MIR**
- **Maintenance, Installation and Repair – Mechanical**
  - Exemplar Occupational Specialism
- **Maintenance, Installation and Repair – Mechatronics**
  - Exemplar Occupational Specialism
- **Maintenance, Installation and Repair – Electrical & Electronics**
  - Exemplar Occupational Specialism
- **Maintenance, Installation and Repair - Control & Instrumentation**
  - Exemplar Occupational Specialism
- **Maintenance, Installation and Repair – Light & Electric Vehicle**
  - Exemplar Occupational Specialism
- How we support you
  - Support & Guidance
  - Events & Webinars?
  - Websites to support providers
  - Opportunities to work for City & Guilds
  - Engineering Text book from Hodder Education
- Opportunity for Questions

Engineering and Manufacturing T Level programme composition

T Level courses include the following compulsory elements:

A Technical Qualification, which includes:

- **core theory, concepts and skills for an industry area**
- **specialist skills and knowledge for an occupation or career**
- **an industry placement with an employer**

The T Level is a full-time two-year programme.

UCAS tariff points will be allocated and will be equivalent in value to three A Levels.

Students will also be required to work towards the attainment of maths and English if they have not already achieved grade 4 at GCSE, as they do on other 16 to 19 programmes.

Core

680 GLH / 1000 TQT

Graded	A* - E
Paper 1	Maths & Science
Paper 2	Engineering Concepts
ESP	Employer Set Project

Covers concepts and theories including core skills.

Occupational specialism

680 GLH / 1000 TQT

Graded Pass/merit/distinction
Based on occupational maps
Covers practical skills and knowledge in a specialist occupational area.

Assessment:

External set and marked exams and an employer set project.

Assessment:

Synoptic assignment covering practical skills and applied knowledge.

Industry Placement
315-420 hours
Min 45-60 days

Maths and English
GCSE or Functional Skills Level 2

(Continue to study as part of the condition of funding)

Tutorial- Employability enrichment, and pastoral hours

Technical Qualification overview for Engineering:

Engineering Core Component (8730)

Pathways:

- Design & Development for Engineering and Manufacturing (8714)
- Maintenance, Installation & Repair for Engineering and Manufacturing (8712)
- Engineering, Manufacturing, Processing and Control (8713)

Learners must complete:

- Engineering Core
- 1 Occupational specialism within a pathway

Route: Engineering and Manufacturing

PATHWAY - Maintenance, Installation and Repair for Engineering and Manufacturing (8712)

Occupational Specialisms

- Mechanical 8712-31
- Mechatronic 8712-32
- Electrical & Electronic 8712-33
- Control & Instrumentation 8712-34
- Light & Electric Vehicle 8712-35

T Level Technical Qualifications

Maintenance, Installation and Repair for Engineering and Manufacturing	
8730 - 12	**Core**
8712 – 31	Mechanical
8712 – 32	Mechatronics
8712 – 33	Electrical & Electronics
8712 – 34	Control & Instrumentation
8712 – 35	Light & Electric Vehicles

Registration information-
Core first before OS

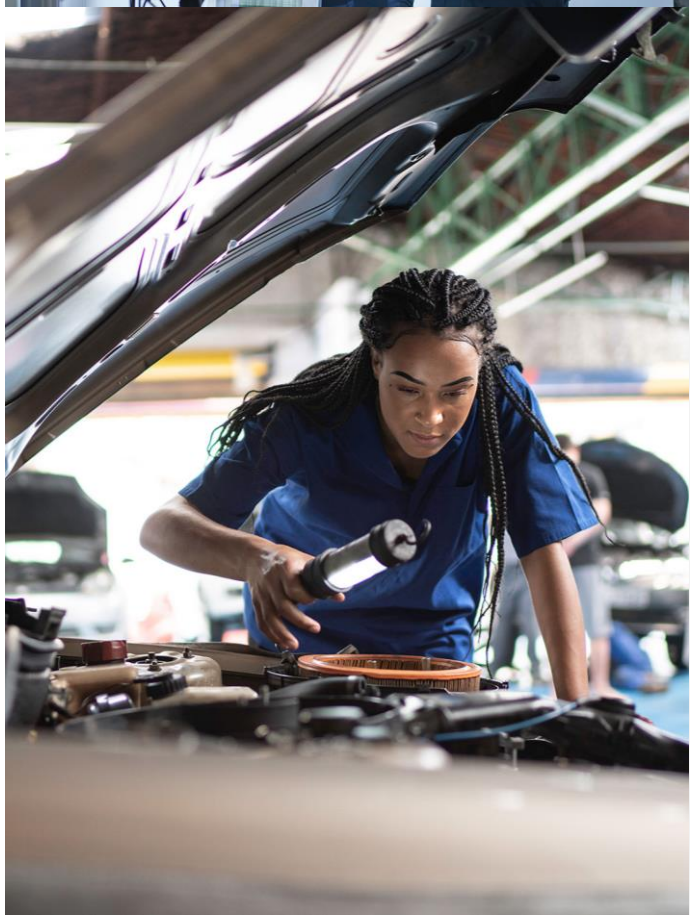

Technical Qualification - Core

Element	Title	GLH
1	Working within the engineering and manufacturing sectors	30
2	Engineering and manufacturing past, present, and future	30
3	Engineering representations	40
4	Essential mathematics for engineering and manufacturing	90
5	Essential science for engineering and manufacturing	90
6	Materials and their properties	60
7	Mechanical principles	35
8	Electrical and electronic principles	35
9	Mechatronics	30
10	Engineering and manufacturing control systems	30
11	Quality management	30
12	Health and safety principles and coverage	60
13	Business, commercial and financial awareness	30
14	Professional responsibilities, attitudes, and behaviours	15
15	Stock and asset management	15
16	Continuous improvement	30
17	Project and programme management	30

Specifications

https://www.cityandguilds.com/tlevels/engineering

Website Navigation

From the homepage you can search for the qualification 8712

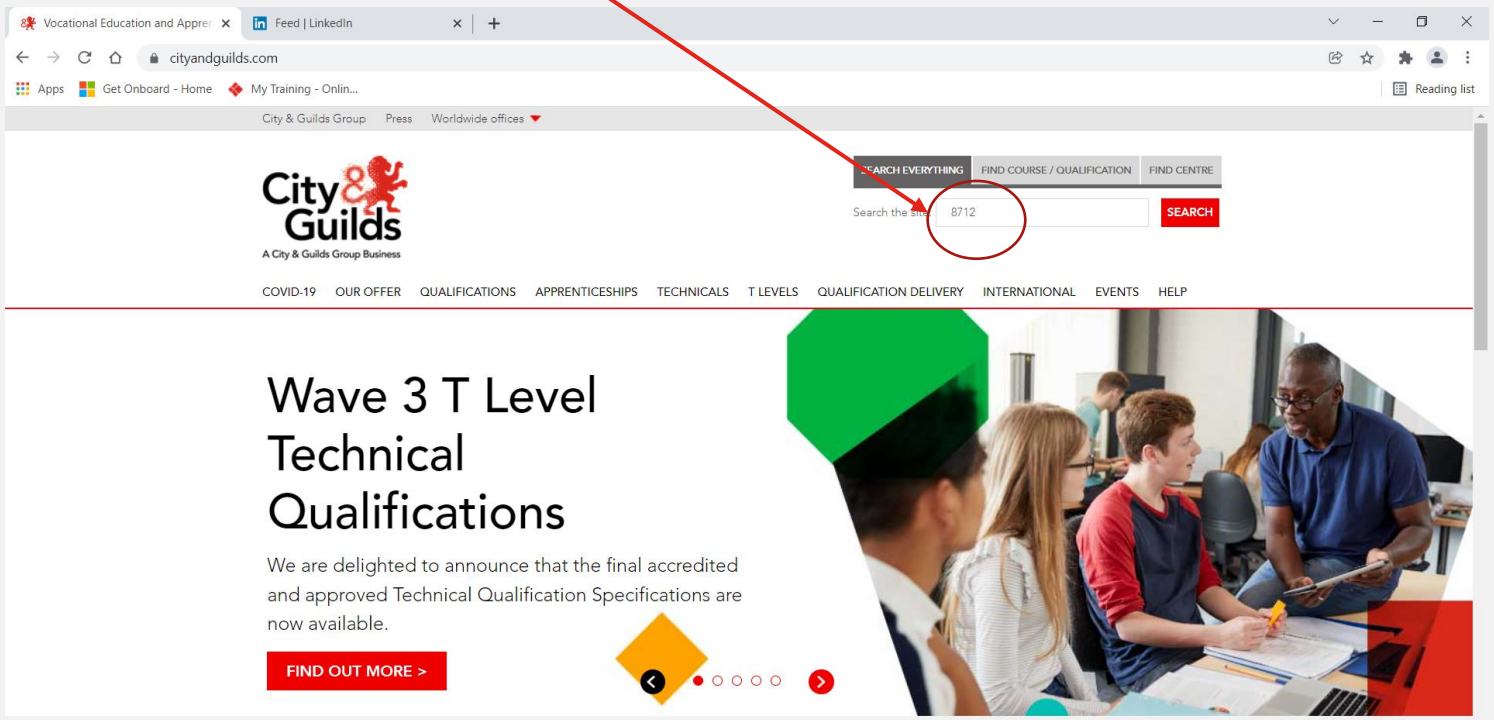

Then select the qualification

T Level Technical Qualification in Maintenance, Installation and Repair for Engineering and Manufacturing (8712)

The T Level Technical Qualification in Maintenance, Installation and Repair for Engineering and Manufacturing allows learners to gain an understanding of what is needed to work within the engineering industry. Topics covered include maintenance, installation and repair requirements, fault

Level 3

Website Navigation

Or navigate through the C&G T Level Resource Hub webpage

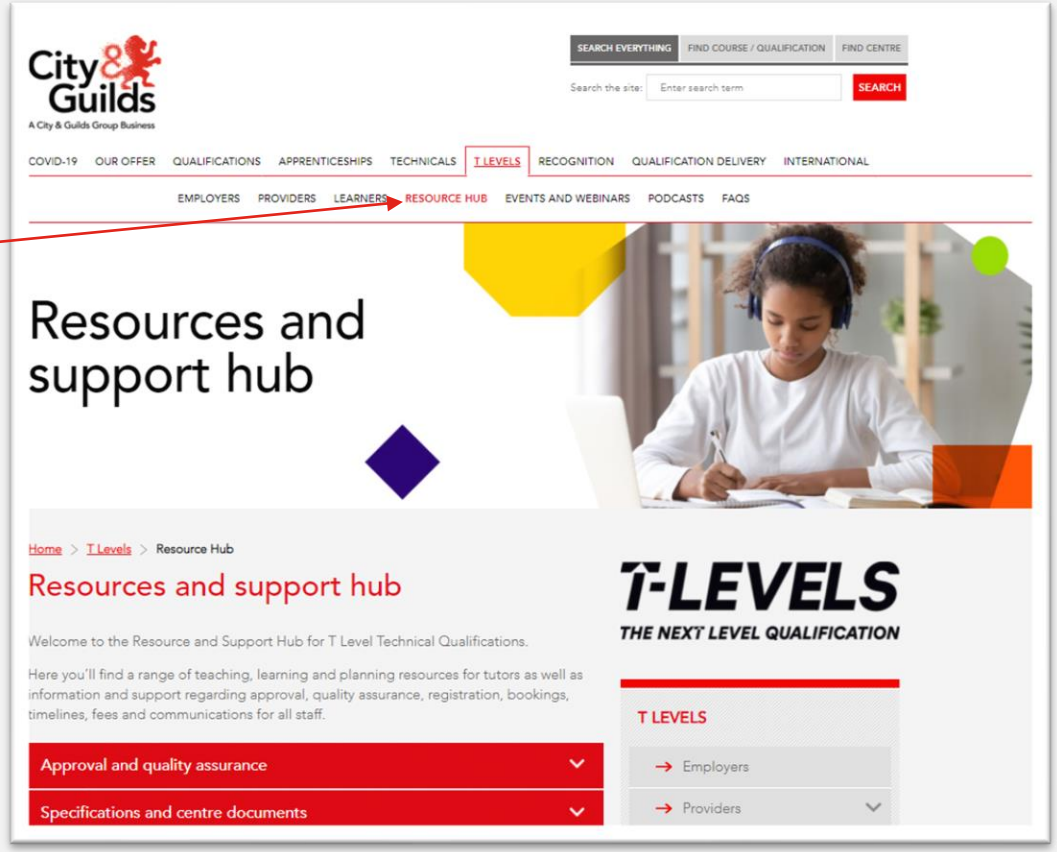

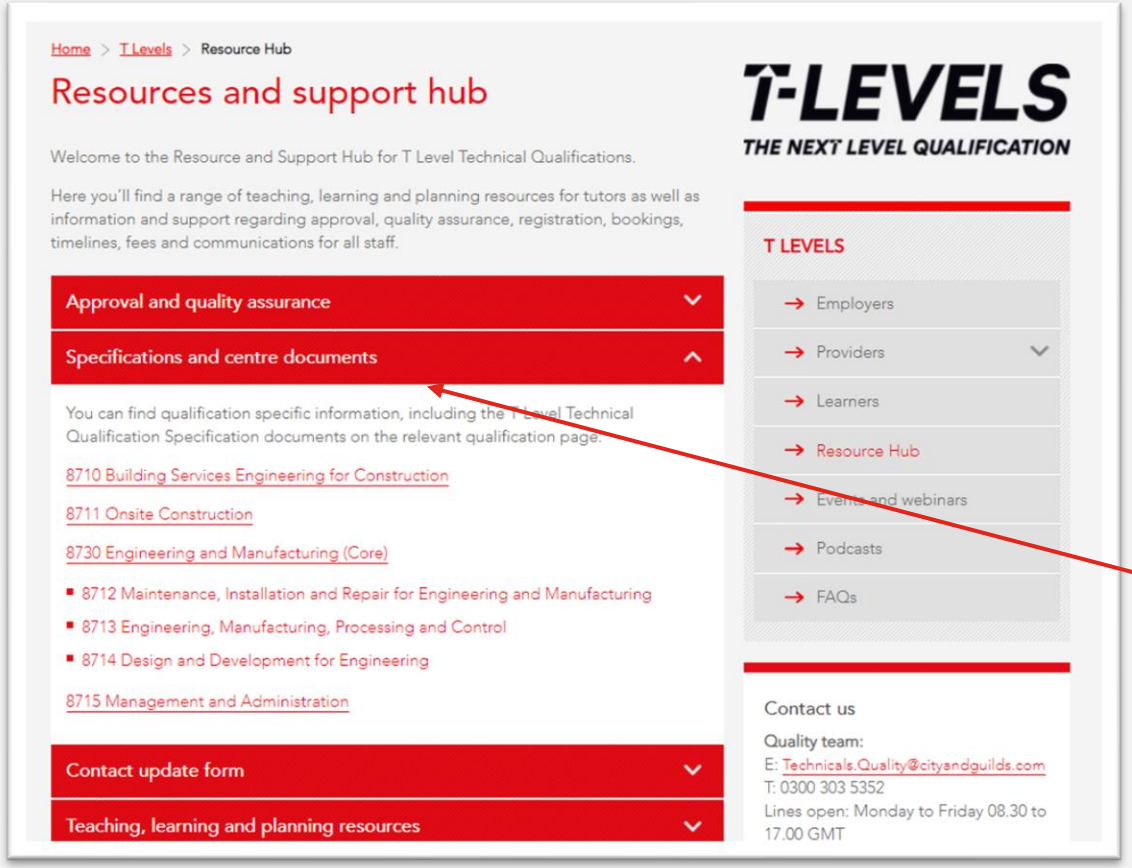

Then select specifications and centre documents

Website Navigation

https://www.cityandguilds.com/tlevels/engineering

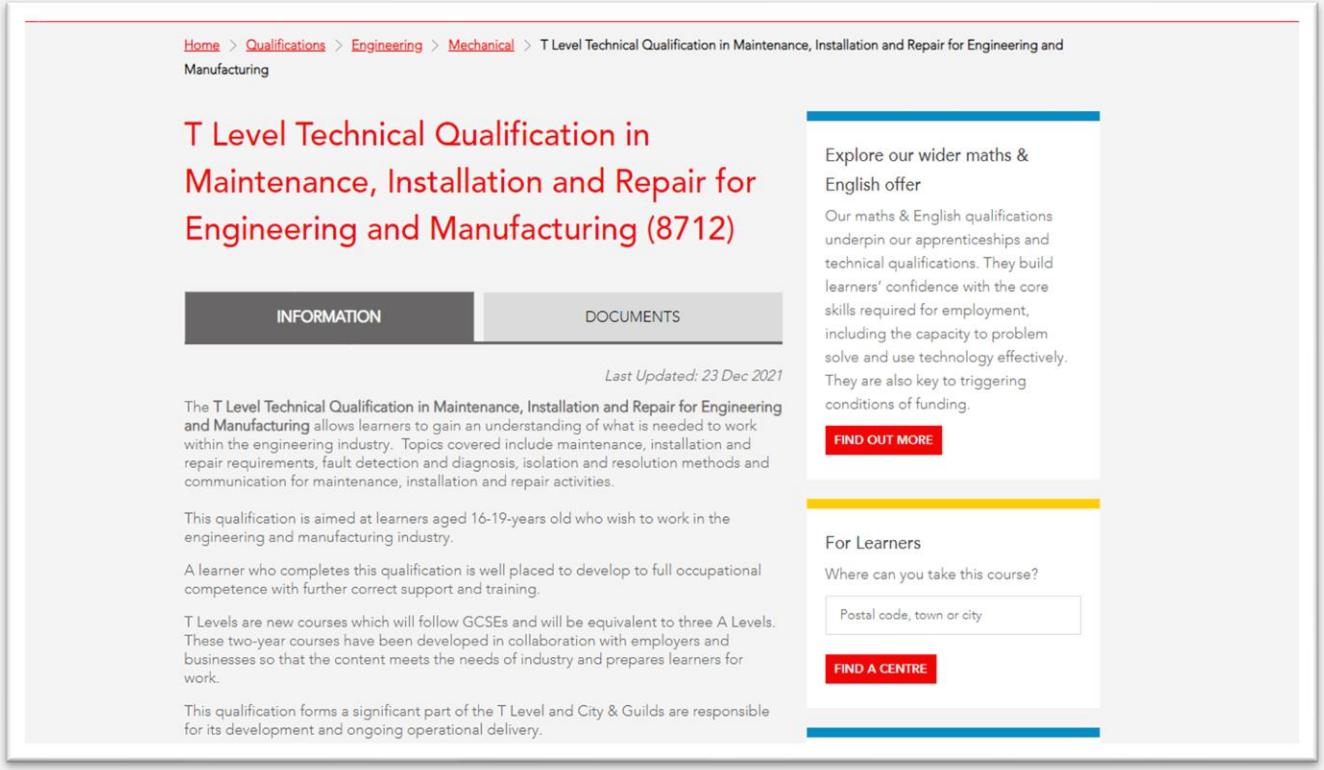

Home > Qualifications > Engineering > Mechanical > T Level Technical Qualification in Maintenance, Installation and Repair for Engineering and Manufacturing

T Level Technical Qualification in Maintenance, Installation and Repair for Engineering and Manufacturing (8712)

INFORMATION | DOCUMENTS

Last Updated: 23 Dec 2021

The **T Level Technical Qualification in Maintenance, Installation and Repair for Engineering and Manufacturing** allows learners to gain an understanding of what is needed to work within the engineering industry. Topics covered include maintenance, installation and repair requirements, fault detection and diagnosis, isolation and resolution methods and communication for maintenance, installation and repair activities.

This qualification is aimed at learners aged 16-19-years old who wish to work in the engineering and manufacturing industry.

A learner who completes this qualification is well placed to develop to full occupational competence with further correct support and training.

T Levels are new courses which will follow GCSEs and will be equivalent to three A Levels. These two-year courses have been developed in collaboration with employers and businesses so that the content meets the needs of industry and prepares learners for work.

This qualification forms a significant part of the T Level and City & Guilds are responsible for its development and ongoing operational delivery.

Explore our wider maths & English offer

Our maths & English qualifications underpin our apprenticeships and technical qualifications. They build learners' confidence with the core skills required for employment, including the capacity to problem solve and use technology effectively. They are also key to triggering conditions of funding.

FIND OUT MORE

For Learners

Where can you take this course?

Postal code, town or city

FIND A CENTRE

Physical resources Occupational Specialisms

(page 15 onwards in specification)

Physical resources

Centres must be able to demonstrate that they have access to the equipment and technical resources required to deliver this qualification and its assessment.

Common resources

- Virtual modelling and CAD software.
- PPE.
- Scientific calculator.
- Manufacturer's instructions.
- Manufacturer's datasheets.
- Mechanical equipment (hand tools, portable power tools).
- Electrical / electronic equipment (hand tools, soldering irons).
- Measurement devices, instrumentation and gauges.

Maintenance engineering technologies: Mechanical

- Maintenance manuals and instructions
- Material safety data sheets (MSDS)
- Appropriate risk assessments
- Technical representations
- Inspection and test record sheets
- Materials and components - non-ferrous (titanium and alloys), ferrous, thermosetting, thermoplastics, composites, smart materials, fasteners.
- Machines – drills (pillar and bench), centre lathe, milling machine, linisher, compressor, manual and computer numerical control (CNC), chuck, machine vice, jigs, tooling.
- Systems - pulleys, levers, gearbox, torque converters, clutches (mechanical, electronic, fluid), cooling, lubrication, motors, belts, shafts,
- Equipment - pulleys, jacks, cranes, hoists, lifts.
- Tools - spanners, sockets (ratchet, universal joints, extension bars), screwdrivers, torx, pry bars, punches, chisels, hacksaw, pliers, mole grips, side cutters, bolt cutters, files, hammers, mallets, crimpers, taps and dies, jigsaw, angle grinder, drills, multitool, reciprocating saw.

  A range of measurement and diagnostic tools and equipment - steel rule, dividers, square (engineers, combination), Vernier callipers, gauges (feeler, pressure, slip, height), multimeters, micrometers, thermocouples, dial test indicator (DTI), coordinate measuring machine (CMM), laser level, comparison plates.

Maintenance engineering technologies: Mechatronic

- Maintenance manuals and instructions
- Material safety data sheets (MSDS)
- Appropriate risk assessments
- Technical representations
- Inspection and test record sheets
- A range of components - switches, sensors (temperature, flow, level, pressure, light, proximity, position), diodes, transistors, rectifiers, capacitors, RCD's, resistors, inductors, relays, actuators, motors (electric, stepper, control, flow control), visual display units (VDU), human machine interface (HMI), transformers, operational amplifiers, potentiometers.
- A range of machines – drills, centre lathe, milling machine, manual and computer numerical control (CNC), tooling.
- A range of systems – gearbox, cams and followers, pulleys, levers, actuation, cooling, lubrication, integrated systems, robotics, integrated circuits, amplifiers, power supplies, sequential, asynchronous/synchronous logic, programmable systems, data logging and measurement systems, automation, AC and DC units, pump.
- A range of mechanisms and controllers - levers, rams, valve blocks, gears, gear trains, gearbox, governors, pulleys, cylinders, microprocessors, microcontrollers, sensors, actuators, motors (electric, stepper, control, flow control), automation.
- Tools for completing maintenance and repair activities – spanners, sockets, screwdrivers, torx, pry bars, pliers wire strippers, soldering iron, de-soldering tool, mole grips, side cutters, crimpers, drills, riveter, multitool, cutters.
- Measurement and diagnostic tools and equipment - test equipment (multimeters, diagnostic testers, CMM), measuring tools (micrometers, Vernier callipers, rule), oscilloscopes, signal generators, logic probes, data logger, flow meter, pressure gauges, pressure sources, calibrators, digital technologies (laptops, tablets, mobile applications, handheld PC (H/PC), personal digital assistant (PDA)).
- Measures of protection - ESD-safe bags and foam, grounding mats, straps and tools, anti-static garments, wrist straps.

Physical resources Occupational Specialisms

(page 15 onwards in specification)

Maintenance engineering technologies: Electrical and Electronic

- Maintenance manuals and instructions
- Material safety data sheets (MSDS)
- Appropriate risk assessments
- Technical representations
- Inspection and test record sheets
- A range of electronic components including transistors, thyristors, operational amplifiers, microcontrollers, logic gates, counters and timers.
- A range of electrical components including switches, diodes, rectifiers, capacitors, RCD, resistors, inductors, relays, transformers and potentiometers.
- Systems and circuits for maintenance and repair activities - amplifiers, power supplies, DC networks, series, parallel, series-parallel, closed, open circuits, power, timer, latching, auxiliary, pulse generation circuits, integrated circuits (IC), electrical motors, modulators, control units, sensing units, AC and DC units.
- Tools for completing maintenance and repair activities - drills, pliers, insulated tool sets, wire cutters, wire strippers, de-soldering tool, spanners, screwdrivers, torx tools, files, hammers, Allen keys, crimping tools, soldering irons, potentiometer trimmers.
- Measurement and test equipment - multimeters, clamp meters, electronic control units, diagnostic testers, micrometers, Vernier callipers, oscilloscopes, signal and function generators, logic probes, data loggers, insulation resistance testers, logic probes, frequency meters.
- Anti-static protection measures - ESD-safe bags and foam, grounding mats, straps and tools, anti-static garments, wrist straps.

Maintenance engineering technologies: Control and Instrumentation

- Maintenance manuals and instructions
- Material safety data sheets (MSDS)
- Appropriate risk assessments
- Technical representations
- Inspection and test record sheets
- Components – switches and sensors (temperature, flow, level, pressure, light, proximity, position), visual display units (VDU), human machine interface (HMI), potentiometers, power supply units, transmitters, transducers, 4-20ma loops, alarms, trips, bulbs, lamps, solenoids, relays, fuses, circuit breakers, power source, gauges, indicators, controllers.
- Systems and circuits – automated, temperature, flow, level, pressure, analogue, digital, measurement, proximity, indicator, power, timing, latching, auxiliary, modulators, control units, microprocessors, microcontrollers, sensing units, output devices, DC networks, robotics.
- Networked systems – supervisory control and data acquisition (SCADA), distributed control system (DCS), process control system (PCS), electronic software distribution (ESD), safety instrumented systems (SIS), proportional integral derivative controller (PID), programmable logic controller (PLC), controller area network (CAN) bus, process field bus (Profibus), process field net (Profinet), foundation fieldbus (FF), Modbus (485, remote terminal unit (RTU)), device net, fibre optic networks, wireless systems, network LAN, ethernet, Bluetooth connectivity.
- Tools and equipment - screwdrivers, torx, spanners, Allen keys, wrenches, pliers, files, mole grips, side cutters, wire strippers, crimping tool, potentiometer trimmer, drills, air compressors, soldering and de-soldering equipment, multi-function calibrators, highway addressable remote transducer (HART), pressure sources, temperature baths, multimeters, oscilloscopes, clamp meters, loop calibrator, digital technologies (laptops, tablets, mobile applications, handheld PC (H/PC), personal digital assistant (PDA)).
- Measurement and diagnostic tools and equipment - multimeters, oscilloscopes, signal generators, thermocouples, thermal cameras, residual temperature devices (RTDs), venturi tubes, orifice plates, turbidity, data logging, analysers (logic, dewpoint, hygrometers, hydrometers, thermometer), automatic, proximity.

Physical resources Occupational Specialisms

(page 15 onwards in specification)

Light and Electric Vehicles

- Maintenance manuals and instructions
- Material safety data sheets (MSDS)
- Appropriate risk assessments
- Technical representations
- Inspection and test record sheets
- Vehicle protective equipment (VPE)
- Vehicles – selection of petroleum, diesel and hybrid/electric vehicles that learners can work on.
- Automotive training rigs such as transmission systems, chassis systems, electrical & electronics, selection of different engine arrangements
- Components that can be taken off and replace such as transmission systems, CVT, gear reduction systems, chassis system, lighting circuits, batteries, electrical components.
- Service parts - filters (pollen, air, oil, fuel, transmission, electric motor coolant), spark plugs, wiper blades, brakes, remote/intelligent key/fob battery, fluids (oil, transmission, power steering, coolant, screen wash, brake).
- Vehicle workshop tools such as spanners, screwdrivers, Allen keys, ratchets and sockets, universal joints, extension bars, hammers, mallets, files, cold chisels, punches, clamps, pliers, hacksaws, crimping tools, measuring tools , hydrometer, Vernier callipers, feeler gauge, angle gauges, torque wrench, tyre tread depth gauge, spark plug adaptor, hand diagnostic equipment, vehicle specific tools, refractometer, insulated tool set, impact wrenches, drills, power tools (cordless drill, hammer drill, electric screwdriver, compressed air driven tools).
- Lifting equipment – jacks (pneumatic, hydraulic, mechanical, scissor, trolley, bottle, ramps, transmission), cranes, hoists.
- Workshop machinery – pillar drill, bench grinder, hand drill, bearing puller.
- Welding Equipment such as spot, MIG, MAG, TIG, gas (brazing, soldering), plasma cutting, Specialist PPE - auto-darkening welding helmet, air-fed welding helmet, welding jacket or apron, welding shoes/boots, gloves, safety glasses, ear plugs or ear defenders, mask or respirator.
- Measurement and diagnostic tools and equipment - multimeters, oscilloscopes, diagnostic analysers, data logging/self-diagnosis equipment, dial tester indicator (DTI), emissions testers, frequency meter, hydraulic pressure, thermal checks, torque devices, testers (coolant, brake fluid, battery, discharge, diagnostic, compression, cooling system pressure, fuel pressure, oil pressure, vacuum gauge, emission), wheel alignment, beam setting, rolling road.

Technical Qualification scheme of assessment overview – Maintenance, Installation and Repair Pathway (page 20 specification)

Core component – Learners must complete all assessment components

Assessment component	Method	Duration	Marks	Weighting	Marking	Grading
Exam paper 1	Externally set exam	2.5 hours	100	35%	Externally marked	This component will be awarded on the grade scale A* -E
Exam paper 2	Externally set exam	2.5 hours	100	35%	Externally marked	
Employer-set project	Externally set project	12.5 hours	90	30%	Externally marked	

Occupational Specialism Component – Learners must complete all assessment components

Assessment component	Method	Duration	Marks	Weighting	Marking	Grading
Maintenance engineering technologies: Mechanical	Externally set assignment	22 hours	90	100%	Externally moderated	All occupational specialism components will be awarded on the grade scale P,M,D
Maintenance engineering technologies: Mechatronic	Externally set assignment	22 hours	90	100%	Externally moderated	
Maintenance engineering technologies: Electrical and Electronic	Externally set assignment	22 hours	90	100%	Externally moderated	
Maintenance engineering technologies: Control and Instrumentation	Externally set assignment	22 hours	90	100%	Externally moderated	
Light and Electric Vehicles	Externally set assignment	22 hours	90	100%	Externally moderated	

Technical Qualification – Employer Set Project

Employer Set project

Task		Conditions	Evidence produced	Evidence submitted?	Timings	Marks available
1	Research	Supervised/ controlled	Technical brief, research notes, list of references/sources	Yes	3 hours	15
2	Report	Supervised/ controlled	Written report, drawings	Yes	4 hours	24
3	Plan	Supervised/ controlled	Planning chart, supporting statement	Yes	3 hours	18
4	Present	Supervised/ controlled	Presentation materials (slides, handouts etc), video recording of presentation	Yes	2.5 hours	24
				Total	12.5 hours	81
					Maths, English and digital skills*	9
					Total marks	90

*10% of the marks (i.e. 9 marks) allocated to maths, English and digital skills across all tasks.

Employer-set project

Component	Assessment method	Assessment weighting
AO1 Plan approach to meet brief	Evidence of a planned approach to work, considered sequence of activity, evidence of prioritisation, review and iterative working. Clearly structured response to brief, cohesive response with ordered sections, logical approach to referencing, research and use of sources, response completed meeting required parameters, sources used effectively and integrated into response, effective use of time allocation available for presentations.	13.3%
AO2 Apply knowledge and skills to contexts	Linking knowledge principles and ideas and applying them in context of the brief when considering compiling response use of materials, concepts etc. Applying core skills e.g. communication, problem solving appropriately throughout tasks within project.	50%
AO3 Select techniques and resources to meet brief	Analysis of key issues, drawing together considerations and considering impacts of elements on each other (not just in isolation), consideration and analysis of the reasons for doing things in a particular way.	13.3%
AO4 Use maths, English and digital skills	Use of correct terminology, abbreviations, units of measurement in context, consideration of audience of brief response (technical versus non-technical wording), use of calculations/diagrams etc appropriately, consideration of the use of ICT and digital methods both in brief response and in presentation.	10%
AO5 Realise project outcome and evaluate	Considered analysis and evaluation of project outcome, response conclusion or evaluation, identification of solutions in response to brief problem with evidence of evaluation of other options and reasons for rejection of other options where not appropriate.	13.3%

Exemplar Employer Set Project

The employer

Generator One Limited are a local company who provide short term solutions to customer's complex power and temperature control issues. They design and install engineering systems such as an Uninterruptible Power Supply (UPS) that provides temporary, cost effective, efficient solutions, that are flexible to meet the customers changing demands.

Generator One Limited ensures the optimum solution is implemented, across a range of applications offered to clients. These include:

- planned electrical and mechanical shutdowns
- unplanned shutdowns and emergencies
- onsite equipment replacement
- supplementary power, heating, or cooling.

The project

Generator One Limited has been approached by a client, the local NHS Trust, who requires their existing hospital backup power systems and standby power system to be replace with a UPS.

The existing back up power system is in the hospital grounds, in an outside caged storage facility, located near the main entrance. The new system will need to be installed into this area.

You have been asked to propose the installation of a standby/offline Diesel Rotary Uninterruptible Power Supply system (DRUPS) (refer to Diagram 1), where the load is powered directly by the input power and backup power circuitry is only invoked when the utility power fails - combining the functionality of a battery-powered or flywheel-powered UPS and a diesel generator.

The ideal of this new system is that a DRUPS will have enough fuel to power the load for days or even weeks in the event of failure of the mains electricity supply.

The commissioning of the end-product will be conducted by a third party.

The client has requested identification of strategies for implementing preventative maintenance systems and routine maintenance programmes as part of the replacement system offering a more reliable and robust solution.

The client has requested identification of requirements for bespoke manufacturing constraints to accommodate a replacement system and is interested in the environmental impact.

The client has provided specification requirements including output voltage, engine data, fuel consumption, lubrication and cooling and generator size.

Working as part of the Generator One Limited team, you need to propose the system that will enable the hospital to continue to deliver the best support and care from the doctors and nurses to all patients.

Additional information

Diagram 1: A Typical Layout of a DRUPS

(Source of image: **Diesel Rotary UPS (DRUPS) - SPG (standbypowergeneration.co.uk)**)

Part Number	Part Name	Part Number	Part Name
1	Electro-magnetic Clutch	6	Vibration dampers
2	Diesel Engine	7	Assembly block
3	Touch Screen Panel	8	Accumulator
4	Power Panel	9	Brushless Exciter
5	Alternator		

Table 1: DRUPS diagram key table

Technical Qualification - Maintenance, Installation & Repair for Engineering and Manufacturing

Practical Assessments

Occupational Specialism Assessment – Practical assignments

Each occupational specialism assessment will comprise of a practical assignment that.

- Contains **90 marks**
- Set duration of **22 hours**
- **Externally set, Internally marked**
- **Externally moderated** by City & Guilds
- is based on an overarching project brief
- Range of individual tasks that are mapped to the performance outcomes of the specialism; with weightings applied per performance outcome.
- Mark scheme that reflects the individual performance outcome assessed by the specialism and with banded marks to reflect the assigned weightings.

Performance Outcomes

- The weightings for each performance outcome will remain the same for every version of the practical assignment. This ensures the appropriate depth and breadth of knowledge and skills for each specialism can be reliably assessed in every version and meets the needs of industry while keeping comparability between each assessment over time.
- Same performance outcomes across all occupational specialisms. Changes to context in “Typical knowledge and skills”

Performance outcome	Typical knowledge and skills	Weighting
PO2 Analyse requirements, specifications and technical information to enable the delivery of successful maintenance, installation, servicing and repair of mechanical plant and equipment.	Interpret requirements of a brief through the analysis and interrogation of available information sources and formats. Consider all relevant aspects of a brief challenging and confirming expectations including risks. Select and use techniques and technologies that will assist in the analysis of information available.	10%
PO3 Plan and prepare the maintenance, installation, servicing and repair of mechanical plant and equipment, taking into account the specific requirements and context	Plan to meet the requirements of a brief effectively with consideration of required resources and technology. Identify and mitigate potential issues prior to maintenance, installation, servicing and repair activities through risk assessment and management. Prepare the work area, including required tools and equipment for maintenance, installation, servicing and repair activities.	20%
PO4 Perform relevant maintenance, installation, servicing and repair of mechanical plant and equipment, using appropriate techniques and procedures to achieve the required quality outcomes and solutions	Maintain, install and repair mechanical electronic systems, equipment, and components. Use diagnostic and measurement techniques, tools and equipment safely and efficiently. Locate faults and carry out maintenance activities efficiently. Remove, repair and replace components in line with best practice to complete maintenance, installation, servicing and repair tasks. Re-commission and return mechanical systems to service, and reinstate the work area following maintenance, installation, servicing and repair activities	40%
PO5 Review and evaluate activities to help improve workplace systems and processes associated with maintenance, installation, servicing and repair of mechanical plant and equipment, demonstrating commercial awareness and accountability	Deal with issues and problems quickly and efficiently, escalate issues in line with correct lines of reporting. Monitor work to ensure efficiency, and safety at all times. Carry out quality monitoring and assurance checks to review processes. Make positive contributions when responding constructively to feedback from others.	20%
PO6 Communicate mechanical operations, maintenance, installation, servicing and repair information, proposals and solutions, producing, recording and explaining relevant technical information	Record and amend technical information, data, risks and issues to support maintenance, installation and repair activities. Use different techniques to communicate technical information effectively with consideration of audience and format, and complete handover procedures.	10%

Technical Qualification - Maintenance, Installation & Repair for Engineering and Manufacturing

Occupational Specialism – Mechanical Engineering

MIR Mechanical Engineering (page 37 onwards in specification)

Component	Assessment method	Overview and conditions
Occupational Specialism assignment	Externally set, externally moderated	This assignment is **externally set, internally marked and externally moderated**, and is designed to require the learner to identify and use effectively in an integrated way an appropriate selection of skills, techniques, concepts, theories and knowledge from across the occupational area. Assignments will be released to centre staff towards the end of the learners' programme, usually the week before Easter each year. Centres will be required to maintain the security of all live assessment materials until assessment windows are open. Assignments will therefore be password-protected and released to centres through a secure method. Guidance on equipment, resources and duration will be released as appropriate to ensure centres can plan for delivery of practical assignments in advance. Learners who fail the occupational specialism following the first submission can retake in any assessment window. Please note that for externally set assignments City & Guilds provides guidance and support to centres on the marking process and associated marking grid in the assessment pack for the qualification, and guidance on the use of marking grids.

Component	Assessment method	Overview and conditions
Maintenance engineering technologies: Mechanical	Externally set, externally moderated	**Content overview** Learners will be able to: • Analyse and interpret requirements for mechanical engineering maintenance, installation and repair • Plan and prepare for mechanical engineering maintenance, installation and repair • Perform maintenance, installation and repair activities on mechanical plant and equipment • Review and evaluate mechanical engineering maintenance, installation and repair activities • Communicate mechanical maintenance, installation, servicing and repair information **Assessment overview:** Learners will be assessed against the following assessment themes: • Health and safety • Planning and preparation • Systems and components • Working with faults • Reviewing and reporting

Specification – Mechanical Engineering (page 79 onwards)

Underpinning knowledge outcomes

On completion of this specialism, learners will understand:

1. Maintenance engineering technology - mechanical knowledge criteria

Performance outcomes

On completion of this specialism, learners will be able to:

2. Analyse requirements, specifications and technical information to enable the delivery of successful maintenance, installation, servicing and repair of mechanical plant and equipment.

3. Plan and prepare the maintenance, installation, servicing and repair of mechanical plant and equipment, taking into account the specific requirements and context.

4. Perform relevant maintenance, installation, servicing and repair of mechanical plant and equipment, using appropriate techniques and procedures to achieve the required quality outcomes and solutions.

5. Review and evaluate activities to help improve workplace systems and processes associated with maintenance, installation, servicing and repair of mechanical plant and equipment, demonstrating commercial awareness and accountability.

6. Communicate mechanical operations, maintenance, installation, servicing and repair information, proposals and solutions, producing, recording and explaining relevant technical information.

Completion of this specialism will give learners the opportunity to develop their Maths, English and Digital Skills. Details are presented at the end of the specification.

311 Maintenance engineering technologies: Mechanical

Level:	3
GLH:	680
Assessment method:	Practical assignment

What is this specialism about?

The purpose of this specialism is for learners to know and understand mechanical engineering systems commonly used in industry. Learners will have the opportunity to plan and undertake maintenance, fault finding, commissioning, testing and repair activities on mechanical systems, and complete associated documentation. Learners will plan, perform and evaluate their work whilst utilising a range of materials, tools, equipment and machinery.

Learners will develop their knowledge and understanding of, and skills in:

- Knowledge of mechanical principles and systems
- Knowledge and application of component classification, numbering and referencing systems
- Knowledge of how components are removed, replaced and repaired as part of mechanical engineering systems
- Skills to plan and prepare mechanical maintenance activities using evaluation
- Skills to select and use tools, equipment, machinery and technology safely and effectively to complete maintenance, installation and repair activities

Learners may be introduced to this specialism by asking themselves questions such as:

- How do mechanical systems operate and function?
- What components are used in mechanical systems?
- How is maintenance, installation and repair carried out within mechanical engineering?

Specification – Mechanical Engineering - Knowledge (page 81 onwards)

Learning Outcome

This section of the specification outlines the subject or topic that needs to be delivered and assessed. Criteria are often supported by the “range”

What do learners need to learn? The primary purpose of these sections is to support the delivery of the content in the criteria. These sections provide context In relation to the depth and breadth to which a subject or topic needs to be taught.

Specialism content

Outcome 1

Underpinning knowledge criteria for the performance outcomes

1.1 **Principles and techniques** for maintenance and repair.

Range:
Principles and techniques –

- removal and replacement activities – assembly and disassembly techniques, mechanical fixings/fastening
- conditions that determine repair – age of components, condition, costings, maintenance, replacement, repair, disposal, installation, downtime, productivity, quality, environmental
- maintenance and servicing strategies – reactive (condition-based monitoring, unplanned/emergency/post-fault), preventative (scheduled, planned, timed)
- disposal requirements – appropriate methods, documentation, legislation, sustainability and environmental considerations
- control documentation – schedules, specifications, method statements, authorisation, care and control procedures
- maintenance planning considerations – cost, production output, safety, skills and competency, equipment, job instructions)
- sources of information – data sheets, technical data, engineering drawings, exploded diagrams, planning sheets, workshop manuals, schematics
- types of tools – hand tools, power tools, test equipment, measuring instruments
- decommissioning considerations – down time, repair costs, environmental issues, productivity, quality, planning, lockouts, hazardous waste, risk assessments, permits, legislation.

What do learners need to learn?	Skills
Reasons of removal and replacement activities. Factors to be considered when determining either repair or replacement of assemblies or sub-assemblies. Types of documentation that are used to monitor, record and control maintenance activities and their typical contents. How to produce or amend appropriate technical documentation. The reasons for planning maintenance activities. Sources of information used in maintenance activities and how they are used. Types and purpose of tools and equipment used in maintenance activities. Disposal requirements appropriate to the waste and relevant legislation. Factors to be considered when decommissioning and their implications.	EC3, EC5, EC6, MC2, MC6, MC7, MC9, DC1, DC2, DC5.

Provides the detail of the information required to be delivered as part of that topic.

Relate to Core Skills and general competencies in English, Mathematics and Digital Skills.

Specification – Mechanical Engineering – Practical Skills

(page 90 onwards)

Learning Outcome

This section of the specification outlines the subject or topic that needs to be delivered and assessed. Criteria are often supported by the "range"

What do learners need to demonstrate?
The primary purpose of these sections is to support the practical skills of the content in the criteria.
These sections provide context In relation to the depth and breadth to which a subject or topic needs to be taught and demonstrated through practical skills.

Practical criteria for performance outcomes

Outcome 2

2. Analyse requirements, specifications and technical information to enable the delivery of successful maintenance, installation, servicing and repair of mechanical plant and equipment.

2.1 Confirm the **type**, **scope** and **requirements** of the activity, task or problem.

Range:
Type – installation, re-installation, position, configuration, assembly, disassembly, modification, fault finding (electrical, electronic, data, system, operational, temperature), resolution methods, preventative measures, repairs, upgrade, downgrade.
Scope – tasks, features, costing, goals, deliverables, functions, requirements, outcomes, end product, depth, detail, time scales, sensory checks, maintenance records and schedules, agreed processes, evidence and data gathering, specifications, repair information, schematics, component diagrams, safety and recall instructions.
Requirements – expectations and desired output, performance requirements, client requirements, reliability, integration of information, health and safety legislation and regulations.

What do learners need to demonstrate?	Skills
Gather, analyse and interpret technical information, data and evidence to confirm type, scope and requirements for the task, considering performance, quality and compliance. Use information to identify and confirm issues, problems, faults and areas for investigations. Analyse and identify likely causes, agreed processes, methods, expectations and outcomes. Interrogate technical documentation considering the accuracy, relevance, currency and completion to understand issues and appropriate methods for resolution or further investigation. Use and respond effectively to specifications, repair information, observed evidence, recall instructions, maintenance tables and technical bulletins. Interpret and confirm all health and safety requirements of maintenance, installation and repair activities.	EC4, EC5, EC6, MC2, MC3, MC5, MC6, MC7, MC9, MC10, DC1, DC4.

Provides the detail of the information required to be delivered and assessed as part of that topic.

Relate to Core Skills and general competencies in English, Mathematics and Digital Skills.

OS Exemplar Assessment - Mechanical

2. Assignment brief

You are a Mechanical Maintenance Engineer, working in the machine workshop of a company that specialises in producing bespoke items.

A manual milling machine is due for an annual service, but it has been reported to your supervisor that it has been showing a fault on the longitudinal travel, and you have been tasked to complete the annual service and maintenance activities to this machine.

Specification

When in normal operation, the longitudinal travel should function as follows:

- moves smoothly from left to right and right to left on the X axis
- moves smoothly back and forth on the Y axis
- can be operated manually by turning the table power feed handle (X axis)
- can be operated automatically by engaging the rapid feed drive (Y axis).

To complete this task, you must:

- plan the service and maintenance activities
- perform the service and maintenance activities, including diagnosing any faults and completing subsequent repairs
- review and report the findings of the service and maintenance completed.

This assignment has a time allocation of 22 hours.

Time

The time allocated for the completion of the tasks and production of evidence for this assessment is 22 hours. Timings for completion of specific tasks are outlined below.

- Task 1 – 5 hours
- Task 2 – 11 hours
- Task 3 – 5 hours
- Task 4 – 1 hour

When working under supervised conditions for longer sessions, breaks can be facilitated outside of the controlled conditions, ensuring the room is locked and all candidates have vacated once the break begins. All materials must be kept securely during the break.

OS Exemplar Assessment - Mechanical

Task 1 – Plan the service and maintenance activities

Candidates must analyse the brief and technical information about the system provided and then:

a) create a list of the requirements and resources for the service and maintenance activities, justifying their selections. This should include:
   - all necessary technical information to confirm the type, scope and requirements of the activity
   - tools and equipment
   - materials, components and consumables
   - wastage and disposal requirements
   - time needed to carry out the activity
   - fault diagnosis methods to be used
   - any access requirements

b) produce and complete a risk assessment

c) produce a method statement.

Task 2 – Perform the service and maintenance activities

Candidates must:

a) prepare the work area for the maintenance and servicing activities

b) perform the annual service and maintenance activities in accordance with the method statement and planning documents produced in Task 1. This should include:
   - decommissioning and inspection of the system
   - disassembly and reassembly of the system
   - diagnosing and recording faults within the system, including carrying out appropriate tests
   - repairing the faults and replacing components and consumables as required
   - safely using the appropriate tools and equipment
   - recommissioning of the system
   - re-instating the work area.

c) record the service and maintenance activities, to include:
   - test record sheets
   - updating the manufacturer's maintenance record and control documents
   - annotated method statement, including any recommendations for further investigation if required.

Task 3a – Review and report the maintenance activities

Candidates must:

i. produce a technical report for the supervisor. This should be approximately 850 words and include:
   - a review of the maintenance activities, including fault diagnosis/detection techniques and suggestions for future improvements
   - the faults found and how they were rectified
   - any outstanding faults, including recommendations that may require attention before the next planned maintenance activity according to the current maintenance schedule
   - reporting of stock levels and waste disposal

ii. produce a revised maintenance schedule from their activities and findings, this should include:
   - recommendations for future planned maintenance including justifications
   - due date of next maintenance activity.

OS Exemplar Assessment - Mechanical

Task 3b – Peer review

The candidate's maintenance schedule will now be reviewed by two peers to provide the candidate with feedback. All candidates will also peer review two maintenance schedules. Assessors must distribute the maintenance schedules for candidates to review and provide peer review forms for candidates to complete the written feedback.

Candidates must:

i. carry out a peer review on two maintenance schedules provided by the assessor. Candidates must consider the following:
   - *how well does the schedule enable planned maintenance activities to be performed and recorded over time?*
   - *how appropriate are the recommended planned maintenance intervals and why?*
   - *what are the implications to the business of the proposed maintenance schedule?*
   - *how could the maintenance schedule be optimised/ improved?*

ii. write up feedback for each of the maintenance schedules on separate peer review forms

iii. update your maintenance schedule following feedback from the peer review. Any updates need to include justifications for these changes and any changes not made will be reviewed in the handover.

Task 4 – Complete handover

Candidates must now hold a meeting with the supervisor to return to service and complete handover procedures, including:

- demonstration of system functionality
- confirmation of work completed
- amended maintenance schedule and how they addressed peer review feedback, including any suggested changes that were not made and why
- appropriate handover documentation.

OS Exemplar Assessment – Mechanical – Marking Grid

Assessment theme – Planning and preparation

Guidance for markers
Evidence from Tasks 1 and 2 must be used to assess performance against this assessment theme.

Task 1
- a list of requirements and resources, including justifications for the selections
- method statement.

Task 2
- assessor observations of the work area preparation
- photographic evidence showing the prepared work area.

Note: where there is insufficient evidence to award a mark, a zero mark must be given	Band 1 descriptor	Band 2 descriptor	Band 3 descriptor	Total marks per sub assessment theme	Total marks for assessment theme
	Indicative content: Planning: • technical documentation relevant to the system gathered, prepared and analysed, including manufacturer's specifications, operation manuals, maintenance schedule and records, and mechanical representations (schematics, drawings, diagrams) to plan and prepare for maintenance activities • detailed method statement of how the task will be carried out in a logical manner with justifications and reasoning to support methods given using correct technical terminology • list of the appropriate requirements and resources for the system provided, including tools and equipment, materials, components and consumables, wastage and disposal requirements, time needed to carry out the activity, fault diagnosis methods to be used and any access requirements o components – oil drain plug, oil seals, nuts, washers, woodruff keys o tools and equipment – appropriate machine equipment, spanners, Allen keys, screwdrivers, dead blow mallet, taps and dies				

	o materials and consumables – lubricants, connectors and fasteners, PPE. Preparation: • appropriate materials, components and resources selected and prepared for the system, type and scope of the tasks, serviceability and working condition to complete the tasks in a timely manner • preparatory checks completed for tools and equipment (including calibration), isolation requirements, work area, sensory, specifications, test dates (PAT test, calibration, electrical safety) • work area prepared logically in accordance with SOPs, with list of resources and requirements, calibrated tools and equipment on hand, manufacturer's specifications and workplace requirements.				
Marks per band	**1-3**	**4-6**	**7-9**	**9**	**18**
Planning	Limited analysis of some technical documentation relevant to the system, covering some factors appropriate to the brief in limited detail. Method statement shows some consideration of scope, processes, tools and equipment, but may not be in a logical sequence or difficult to follow, using some relevant technical terminology but not always accurately. Limited list of resources and requirements, including relevant technical documentation, with limited justifications.	Analysis of most technical documentation relevant to the system, covering most factors appropriate to the brief in some detail. Method statement shows clear consideration of scope, processes, tools and equipment, which is mostly in a logical order and can be followed, using some relevant technical terminology accurately. Most resources and requirements are listed, including technical documentation, with some justifications for most, or full justifications for some.	Thorough analysis of all technical documentation relevant to the system, covering all factors appropriate to the brief in comprehensive detail. Method statement shows full consideration of scope, processes, tools and equipment, which is fully logical and can be easily followed by a third party, using relevant and accurate technical terminology throughout. Comprehensive list of all resources and requirements, including technical documentation, with full justifications for all.		

Technical Qualification - Maintenance, Installation & Repair for Engineering and Manufacturing

Occupational Specialism – Mechatronic

MIR Mechatronics (page 37 onwards in specification)

Component	Assessment method	Overview and conditions
Occupational Specialism assignment	Externally set, externally moderated	This assignment is **externally set, internally marked and externally moderated**, and is designed to require the learner to identify and use effectively in an integrated way an appropriate selection of skills, techniques, concepts, theories and knowledge from across the occupational area. Assignments will be released to centre staff towards the end of the learners' programme, usually the week before Easter each year. Centres will be required to maintain the security of all live assessment materials until assessment windows are open. Assignments will therefore be password-protected and released to centres through a secure method. Guidance on equipment, resources and duration will be released as appropriate to ensure centres can plan for delivery of practical assignments in advance. Learners who fail the occupational specialism following the first submission can retake in any assessment window. Please note that for externally set assignments City & Guilds provides guidance and support to centres on the marking process and associated marking grid in the assessment pack for the qualification, and guidance on the use of marking grids.

Component	Assessment method	Overview and conditions
Maintenance engineering technologies: Mechatronic	Externally set, externally moderated	**Content overview** Learners will be able to: • Analyse and interpret requirements for mechatronic maintenance, installation and repair • Plan and prepare for mechatronic maintenance, installation and repair activities • Perform maintenance, installation and repair activities on mechatronic technology, systems and equipment • Review and evaluate mechatronic maintenance, installation and repair activities • Communicate mechatronic maintenance, installation, servicing and repair information **Assessment overview:** Learners will be assessed against the following assessment themes: • Health and safety • Planning and preparation • Systems and components • Working with faults • Reviewing and reporting

Specification – Mechatronics(page 106 onwards)

Knowledge (page 108 onwards)

Practical Skills (page 118 onwards)

Underpinning knowledge outcomes

On completion of this specialism, learners will understand:

1. Maintenance engineering technology - mechatronics knowledge criteria

Performance outcomes

On completion of this specialism, learners will be able to:

2. Analyse requirements, specifications, and technical information to enable the delivery of successful maintenance, installation, servicing and repair of mechatronic technology, systems, and equipment.

3. Plan and prepare the maintenance, installation, servicing and repair of mechatronic technology, systems, and equipment, considering the specific requirements and context.

4. Perform relevant maintenance, installation, servicing and repair of mechatronic technology, systems, and equipment, using appropriate techniques and procedures to achieve the required quality outcomes and solutions.

5. Review and evaluate activities to help improve workplace systems and processes associated with maintenance, installation, servicing and repair of mechatronic technology, systems, and equipment, demonstrating commercial awareness and accountability.

6. Communicate mechatronic maintenance, installation, servicing and repair information, proposals, and solutions, producing, recording, and explaining relevant technical information.

Completion of this specialism will give learners the opportunity to develop their Maths, English, and Digital Skills. Details are presented at the end of the specification.

312 Maintenance engineering technologies: Mechatronic

Level:	3
GLH:	680
Assessment method:	Practical assignment

What is this specialism about?

The purpose of this specialism is for learners to know and understand mechatronic engineering systems and undertake key procedures for maintenance, installation and repair. Learners will have the opportunity to plan, perform and evaluate their work whilst utilising a range of materials, tools, equipment and machinery.

Learners will develop their knowledge and understanding of, and skills in:

- Knowledge of common mechanisms and controllers
- Knowledge and application of component classification, numbering and referencing systems
- Knowledge of how components are removed, replaced and repaired as part of mechatronic systems
- Skills to plan and prepare mechatronic maintenance activities using evaluation
- Skills to select and use tools, equipment, machinery and technology safely and effectively to complete maintenance, installation and repair activities

Learners may be introduced to this specialism by asking themselves questions such as:

- How do mechatronic systems operate and function?
- What components are used in mechatronic systems?
- How is maintenance, installation and repair carried out within mechatronic engineering?

OS Exemplar Assessment – Mechatronics

2. Assignment brief

You are a newly qualified mechatronic engineer working for a maintenance company.

The client has contacted your supervisor to report an offline motor fault on a Selective Compliance Assembly Robot Arm (SCARA), as shown in Figures 1, 2 and 3, which is being indicated on the human machine interface (HMI). The system is also due for planned maintenance.

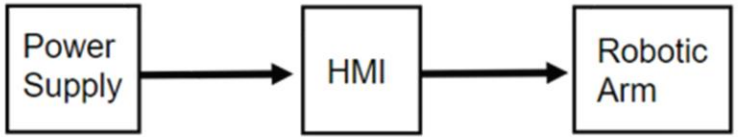

Figure 1 – Block diagram

Specification:

When in normal operation, the SCARA should function as follows:

- a programmable HMI (Fig 1) displays the current state of operation
- the first and second independently operable drive motors are supported by a base which also contains a motor (Fig 2)
- toothed belts engage toothed gears for rotating primary and secondary arms in response to the primary and secondary drive motors (Fig 3)
- this enables precise manoeuvrability of the end effector (Fig 2).

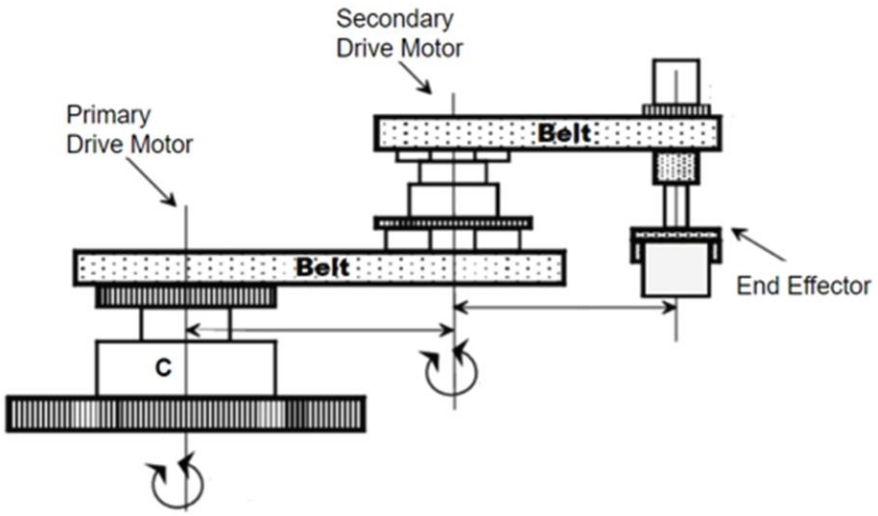

Figure 2 – System schematic

- Task 1 – 5 hours
- Task 2 – 11 hours
- Task 3 – 5 hours
- Task 4 – 1 hour

Specification:

When in normal operation, the primary robotic arm assembly shown in Figure 3 should function as follows:

- the bidirectional toothed belt is driven by motors
- a tensioning idler device is positioned within the belt loop to maintain operational tension
- the belt rotates via toothed pulleys and moves in both directions
- the sealed outer casing provides protection for the drive belt and motors.

You must:

- plan the maintenance required
- perform the maintenance activities, including diagnosing any faults and performing subsequent repairs
- review and report the findings of the maintenance completed.

This assignment has a time allocation of 22 hours.

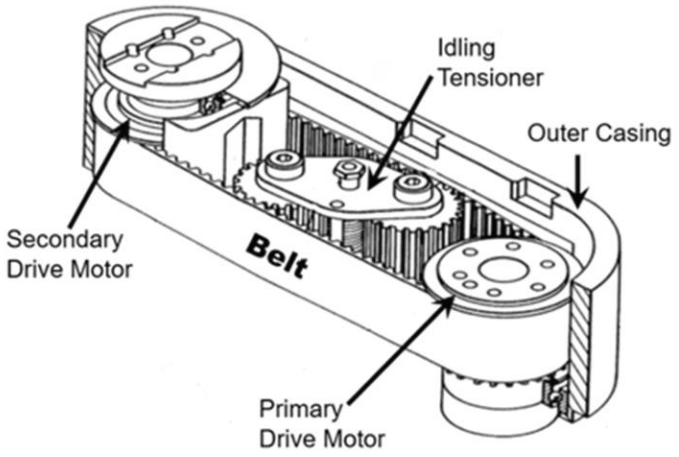

Figure 3 – Primary robotic arm assembly

Source: https://patents.google.com/patent/US4693666A/en?oq=us4693666

OS Exemplar Assessment – Mechatronics

Task 1 – Plan the service and maintenance activities

Candidates must analyse the brief and technical information about the system provided and then:

a) create a list of the requirements and resources for the service and maintenance activities, justifying their selections. This should include:
   - all necessary technical information to confirm the type, scope and requirements of the activity
   - tools and equipment
   - materials, components and consumables
   - wastage and disposal requirements
   - time needed to carry out the activity
   - fault diagnosis methods to be used
   - any access requirements

b) produce and complete a risk assessment

c) produce a method statement.

Task 2 – Perform the maintenance activities

Candidates must:

a) prepare the work area for the maintenance activities

b) perform the maintenance activities in accordance with the method statement and planning documents produced in Task 1. This should include:
   - decommissioning and inspection of the system
   - disassembly and reassembly of the system
   - diagnosing and recording faults within the system, including carrying out appropriate tests
   - repairing faults and replacing components as required
   - safely using the appropriate tools and equipment
   - recommissioning of the system
   - re-instating the work area

c) record the maintenance activities, to include:
   - completed test record sheets
   - updated maintenance records and control documents
   - annotated method statement, including any recommendations for further investigation if required.

Task 3a – Review and report the maintenance activities

Candidates must:

i. produce a technical report for the supervisor. This should be approximately 850 words and include:
   - a review of the maintenance activities, including fault diagnosis/detection techniques and suggestions for future improvements
   - the faults found and how they were rectified
   - any outstanding faults, including recommendations that may require attention before the next planned maintenance activity according to the current maintenance schedule
   - reporting of stock levels and waste disposal

ii. produce a revised maintenance schedule from their activities and findings, this should include:
   - recommendations for future planned maintenance including justifications
   - due date of next maintenance activity.

OS Exemplar Assessment – Mechatronics

Task 3b – Peer review

The candidate's maintenance schedule will now be reviewed by two peers to provide the candidate with feedback. All candidates will also peer review two maintenance schedules. Assessors must distribute the maintenance schedules for candidates to review and provide peer review forms for candidates to complete the written feedback.

Candidates must:

i. carry out a peer review on two maintenance schedules provided by the assessor. Candidates must consider the following:
   - *how well does the schedule enable planned maintenance activities to be performed and recorded over time?*
   - *how appropriate are the recommended planned maintenance intervals and why?*
   - *what are the implications to the business of the proposed maintenance schedule?*
   - *how could the maintenance schedule be optimised/improved?*

ii. write up feedback for each of the maintenance schedules on separate peer review forms

iii. update your maintenance schedule following feedback from the peer review. Any updates need to include justifications for these changes and any changes not made will be reviewed in the handover.

Task 4 – Complete handover

Candidates must now hold a meeting with the client to return to service and complete handover procedures, including:

- demonstration of system functionality
- confirmation of work completed
- amended maintenance schedule and how they addressed peer review feedback, including any suggested changes that were not made and why
- appropriate handover documentation.

Conditions of assessment:

- the time allocated for this task is 1 hour:
  - 30 minutes to prepare for the handover meeting and 30 minutes to carry out the handover meeting
- candidates must carry out the task on their own, under **controlled conditions** while being observed
- candidates must be given copies of their completed documentation from Tasks 1, 2 and 3
- candidates must carry out the handover meeting, with the assessor taking the part of the client
- there will be no interaction required or permitted as part of the handover.

Technical Qualification - Maintenance, Installation & Repair for Engineering and Manufacturing

Occupational Specialism – Electrical & Electronics Engineering

MIR Electrical & Electronics Engineering (page 37 onwards in specification)

Component	Assessment method	Overview and conditions
Occupational Specialism assignment	Externally set, externally moderated	This assignment is **externally set, internally marked and externally moderated**, and is designed to require the learner to identify and use effectively in an integrated way an appropriate selection of skills, techniques, concepts, theories and knowledge from across the occupational area. Assignments will be released to centre staff towards the end of the learners' programme, usually the week before Easter each year. Centres will be required to maintain the security of all live assessment materials until assessment windows are open. Assignments will therefore be password-protected and released to centres through a secure method. Guidance on equipment, resources and duration will be released as appropriate to ensure centres can plan for delivery of practical assignments in advance. Learners who fail the occupational specialism following the first submission can retake in any assessment window. Please note that for externally set assignments City & Guilds provides guidance and support to centres on the marking process and associated marking grid in the assessment pack for the qualification, and guidance on the use of marking grids.

Component	Assessment method	Overview and conditions
Maintenance engineering technologies: Electrical and Electronic	Externally set, externally moderated	**Content overview** Learners will be able to: • Analyse and interpret requirements for electrical and electronic maintenance, installation and repair • Plan and prepare for electrical and electronic maintenance, installation and repair activities • Perform maintenance, installation and repair activities on electrical and electronic technology, systems and equipment • Review and evaluate electrical and electronic maintenance, installation and repair activities • Communicate electrical and electronic maintenance, installation, servicing and repair information **Assessment overview:** Learners will be assessed against the following assessment themes: • Health and safety • Planning and preparation • Systems and components • Working with faults • Reviewing and reporting

Specification – Electrical & Electronics Engineering (page 135 onwards)

Knowledge (page 137 onwards)

Practical Skills (page 146 onwards)

Underpinning knowledge outcomes

On completion of this specialism, learners will understand:

1. Maintenance engineering technology - electrical and electronic knowledge criteria

Performance outcomes

On completion of this specialism, learners will be able to:

2. Analyse requirements, specifications and technical information to enable the delivery of successful maintenance, installation, servicing and repair of electrical and electronic technology, systems and equipment.

3. Plan and prepare the maintenance, installation, servicing and repair of electrical and electronic technology, systems and equipment, taking into account the specific requirements and context.

4. Perform relevant maintenance, installation, servicing and repair of electrical and electronic technology, systems, and equipment, using appropriate techniques and procedures to achieve the required quality outcomes and solutions.

5. Review and evaluate activities to help improve workplace systems and processes associated with maintenance, installation, servicing and repair of electrical and electronic technology, systems, and equipment, demonstrating commercial awareness and accountability.

6. Communicate electrical and electronic maintenance, installation, servicing and repair information, proposals and solutions, producing, recording and explaining relevant technical information.

Completion of this specialism will give learners the opportunity to develop their Maths, English and Digital Skills. Details are presented at the end of the specification.

313 **Maintenance engineering technologies: Electrical and electronic**

Level:	3
GLH:	680
Assessment method:	Practical assignment

What is this specialism about?

The purpose of this specialism is for learners to know and understand electrical and electronic components and systems, and undertake key procedures for maintenance, installation and repair. Learners will have the opportunity to plan, perform and evaluate their work whilst utilising a range of materials, tools and equipment.

Learners will develop their knowledge and understanding of, and skills in:

- Knowledge of the construction and operation of standard power conversion systems
- Knowledge and application of component classification, numbering and referencing systems
- Knowledge of how components are removed, replaced and repaired as part of electrical and electronic systems
- Skills to plan and prepare electrical and electronic maintenance activities using analysis and evaluation
- Skills to select and use tools, equipment, machinery and technology safely and effectively to complete maintenance, installation and repair activities

Learners may be introduced to this specialism by asking themselves questions such as:

- How do electrical and electronic systems operate and function?
- What are the components used in electrical and electronic?
- How is maintenance, installation and repair to electrical and electronic systems carried out?

OS Exemplar Assessment – Electrical & Electronic Engineering

2. Assignment brief

You are a maintenance engineer working for a local electrical and electronic engineering company.

Your supervisor has given you a request from a regular client asking you to perform a planned maintenance activity on an alternating current (AC) to direct current (DC) power conversion system. They have also reported to your supervisor that the system has not been functioning as expected and may therefore be faulty.

A block diagram, schematic diagram and specification detailing the power conversion system's layout and expected operation are shown in Figures 1 and 2 below.

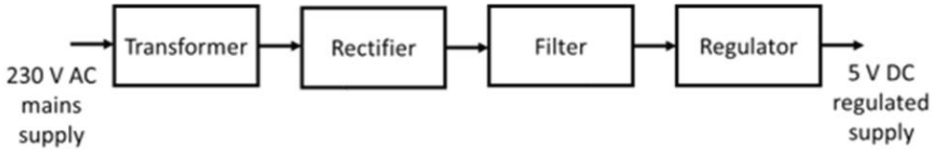

Figure 1 – Block diagram of system

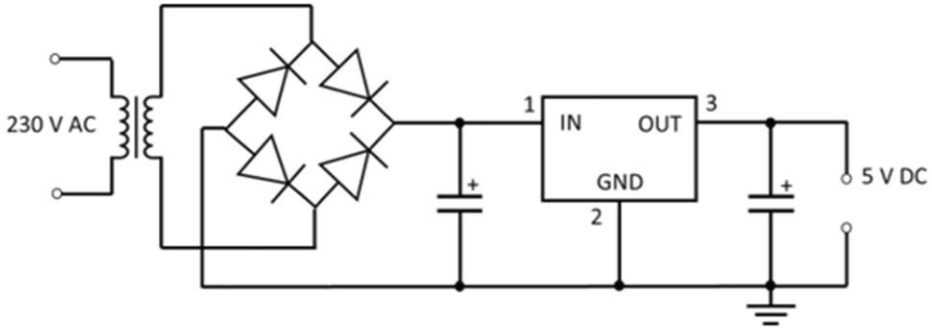

Figure 2 – Circuit schematic

Specification:

When in normal operation each block of the system should function as follows:

- the transformer should convert the 230 V mains AC voltage to a lower AC voltage
- the rectifier should convert the AC voltage into a DC voltage
- the filter should remove any large fluctuations from the rectifier output voltage
- the regulator should use diodes to remove any remaining voltage ripples and produce the required 5 V DC voltage.

You must:

- plan the maintenance required
- perform the maintenance activity, including diagnosing any faults and performing subsequent repairs
- review and report the findings of the maintenance completed.

This assignment has a time allocation of 22 hours.

Time

The time allocated for the completion of the tasks and production of evidence for this assessment is 22 hours. Timings for completion of specific tasks are outlined below.

- Task 1 – 5 hours
- Task 2 – 11 hours
- Task 3 – 5 hours
- Task 4 – 1 hour

When working under supervised conditions for longer sessions, breaks can be facilitated outside of the controlled conditions, ensuring the room is locked and all candidates have vacated once the break begins. All materials must be kept securely during the break.

OS Exemplar Assessment – Electrical & Electronic Engineering

Task 1 – Plan and prepare for the maintenance activities

Candidates must analyse the brief and technical information about the system provided and then:

a) create a list of the requirements and resources for the maintenance activities, justifying their selections. This should include:
   - all necessary technical information to confirm the type, scope and requirements of the activity
   - tools and equipment
   - materials, components and consumables
   - wastage and disposal requirements
   - time needed to carry out the activity
   - fault diagnosis methods to be used
   - any access requirements

b) produce and complete a risk assessment

c) produce a method statement.

Task 2 – Perform the maintenance activities

Candidates must:

a) prepare the work area for the maintenance activities

b) perform the maintenance activities in accordance with the method statement and planning documents produced in task 1. This should include:
   - decommissioning and inspection of the system
   - disassembly and reassembly of the system
   - diagnosing faults within the system, including carrying out appropriate tests
   - repairing the faults and replacing components as required
   - safely using the appropriate tools and equipment
   - recommissioning of the system
   - re-instating the work area

c) record the maintenance activities, to include:
   - completed test record sheets
   - updated maintenance records and control documents
   - annotated method statement, including any recommendations for further investigation if required.

Task 3a – Review and report the maintenance activities

Candidates must:

i. produce a technical report for the supervisor. This should typically be 850 words and include:
   - a review of the maintenance activities, including fault diagnosis/detection techniques and suggestions for future improvements
   - the faults found and how they were rectified
   - any outstanding faults, including recommendations that may require attention before the next planned maintenance activity according to the current maintenance schedule
   - reporting of stock levels and waste disposal

ii. produce a revised maintenance schedule from your activities and findings, this should include:
   - recommendations for future planned maintenance including justifications
   - due date of next maintenance activity.

OS Exemplar Assessment – Electrical & Electronic Engineering

Task 3b – Peer review

The candidate's maintenance schedule will now be reviewed by two peers to provide the candidate with feedback. All candidates will also peer review two maintenance schedules. Assessors must distribute the maintenance schedules for candidates to review and provide peer review forms for candidates to complete the written feedback.

Candidates must:

i. carry out a peer review on two maintenance schedules provided by the assessor. Candidates must consider the following:
   - *how well does the schedule enable planned maintenance activities to be performed and recorded over time?*
   - *how appropriate are the recommended planned maintenance intervals and why?*
   - *what are the implications to the business of the proposed maintenance schedule?*
   - *how could the maintenance schedule be optimised/improved?*

ii. write up feedback for each of the maintenance schedules on separate peer review forms

iii. update your maintenance schedule following feedback from the peer review. Any updates need to include justifications for these changes and any changes not made will be reviewed in the handover.

Task 4 – Complete handover

Candidates must now hold a meeting with the client to return to service and complete handover procedures, including:

- demonstration of system functionality
- confirmation of work completed
- amended maintenance schedule and how they addressed peer review feedback, including any suggested changes that were not made and why
- appropriate handover documentation.

Conditions of assessment:

- the time allocated for this task is 1 hour:
  - 30 minutes to prepare for the handover meeting and 30 minutes to carry out the handover meeting
- candidates must carry out the task on their own, under **controlled conditions** while being observed
- candidates must be given copies of their completed documentation from Tasks 1, 2 and 3
- candidates must carry out the handover meeting, with the assessor taking the part of the client
- there will be no interaction required or permitted as part of the handover.

Technical Qualification - Maintenance, Installation & Repair for Engineering and Manufacturing

Occupational Specialism – Control & Instrumentation Engineering

MIR Control & Instrumentation Engineering (page 37 onwards in specification)

Component	Assessment method	Overview and conditions
Occupational Specialism assignment	Externally set, externally moderated	This assignment is **externally set, internally marked and externally moderated**, and is designed to require the learner to identify and use effectively in an integrated way an appropriate selection of skills, techniques, concepts, theories and knowledge from across the occupational area. Assignments will be released to centre staff towards the end of the learners' programme, usually the week before Easter each year. Centres will be required to maintain the security of all live assessment materials until assessment windows are open. Assignments will therefore be password-protected and released to centres through a secure method. Guidance on equipment, resources and duration will be released as appropriate to ensure centres can plan for delivery of practical assignments in advance. Learners who fail the occupational specialism following the first submission can retake in any assessment window. Please note that for externally set assignments City & Guilds provides guidance and support to centres on the marking process and associated marking grid in the assessment pack for the qualification, and guidance on the use of marking grids.

Component	Assessment method	Overview and conditions
Maintenance engineering technologies: Control and Instrumentation	Externally set, externally moderated	**Content overview** Learners will be able to: • Analyse and interpret requirements for control and instrumentation maintenance, installation and repair • Plan and prepare for control and instrumentation maintenance, installation and repair activities • Perform maintenance, installation and repair activities on control and instrumentation technology, systems and equipment • Review and evaluate control and instrumentation maintenance, installation and repair activities • Communicate control and instrumentation maintenance, installation, servicing and repair information **Assessment overview:** Learners will be assessed against the following assessment themes: • Health and safety • Planning and preparation • Systems and components • Working with faults • Reviewing and reporting

Specification – Control & Instrumentation (page 163 onwards)

Knowledge (page 165 onwards)

Practical Skills (page 176 onwards)

Underpinning knowledge outcomes

On completion of this specialism, learners will understand:

1. Control and instrumentation knowledge criteria

Performance outcomes

On completion of this specialism, learners will be able to:

2. Analyse requirements, specifications and technical information to enable the delivery of successful maintenance, installation, servicing and repair of control and instrumentation technology, systems, and equipment.

3. Plan and prepare the maintenance, installation, servicing and repair of control and instrumentation technology, systems and equipment, taking into account the specific requirements and context.

4. Perform relevant maintenance, installation, servicing and repair of control and instrumentation technology, systems, and equipment, using appropriate techniques and procedures to achieve the required quality outcomes and solutions.

5. Review and evaluate activities to help improve workplace systems and processes associated with maintenance, installation, servicing and repair of control and instrumentation technology, systems, and equipment, demonstrating commercial awareness and accountability.

6. Communicate control and instrumentation maintenance, installation, servicing and repair information, proposals and solutions, producing, recording and explaining relevant technical information.

Completion of this specialism will give learners the opportunity to develop their Maths, English and Digital Skills. Details are presented at the end of the specification.

314 Maintenance engineering technologies: Control and instrumentation

Level:	3
GLH:	680
Assessment method:	Practical assignment

What is this specialism about?

The purpose of this specialism is for learners to know and understand control and instrumentation systems commonly used in industry. Learners will have the opportunity to plan and undertake maintenance, fault finding, commissioning, testing and repair activities on control and instrumentation systems and devices, and complete associated documentation.

Learners will develop their knowledge and understanding of, and skills in:

- Knowledge of electronic sensing and measurement techniques and technologies used in control and instrumentation systems
- Knowledge and application of component classification, numbering and referencing systems
- Knowledge of how components are removed, replaced and repaired as part of control and instrumentation systems
- Skills to plan and prepare control and instrumentation maintenance activities using analysis and evaluation
- Skills to select and use tools, equipment, machinery and technology safely and effectively to complete control and instrumentation maintenance, installation and repair activities

Learners may be introduced to this specialism by asking themselves questions such as:

- How do control and instrumentation systems operate and function?
- Why is control required as part of an engineering system?
- What is the importance of accurate calibration and maintenance of control and instrumentation components and equipment?

OS Exemplar Assessment – Control & Instrumentation

2. Assignment brief

You are a Control and Instrumentation Maintenance Engineer working on an oil and gas process rig.

Your supervisor has asked you to complete a planned maintenance activity on the temperature control system for one of the oil tanks. The system consists of a thermocouple connected through a transmitter head and monitored remotely through a wireless network. It has also been reported that the human machine interface (HMI) is indicating the system is offline, which you are required to investigate.

A block diagram, schematic diagram and specification detailing the temperature control system layout and expected operation are shown in Figures 1 and 2 below.

Figure 1 - Block diagram

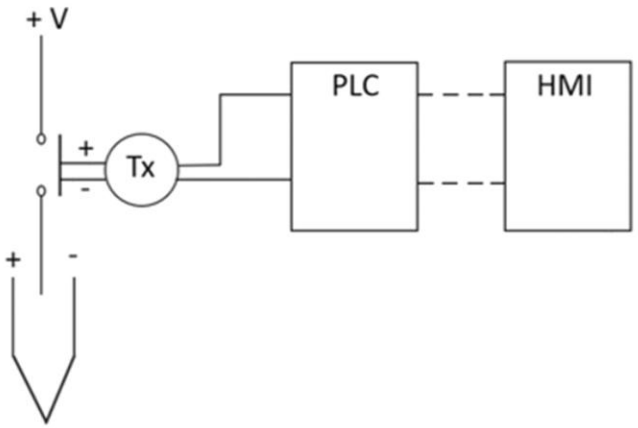

Figure 2 - Schematic diagram

Specification:

When in normal operation, the system should function as follows:

- the thermocouple is used to monitor the temperature of the oil in the tank
- the transmitter converts the temperature to a 4-20 mA signal and transmits the signal to the programmable logic controller (PLC)
- the PLC is programmed to maintain and monitor the temperature in the tank according to the set parameters
- the PLC is connected remotely to the HMI
- the HMI indicates when the temperature is outside the range of 40°C to 60°C and displays the current operational state of the process.

You must:

- plan the maintenance required
- perform the maintenance activities, including diagnosing any faults and performing subsequent repairs
- review and report the findings of the maintenance completed.

This assignment has a time allocation of 22 hours.

Time

The time allocated for the completion of the tasks and production of evidence for this assessment is 22 hours. Timings for completion of specific tasks are outlined below.

- Task 1 – 5 hours
- Task 2 – 11 hours
- Task 3 – 5 hours
- Task 4 – 1 hour

When working under supervised conditions for longer sessions, breaks can be facilitated outside of the controlled conditions, ensuring the room is locked and all candidates have vacated once the break begins. All materials must be kept securely during the break.

OS Exemplar Assessment – Control & Instrumentation

Task 1 – Plan and prepare for the maintenance activities

Candidates must analyse the brief and technical information about the system provided and then:

a) create a list of the requirements and resources for the maintenance activities, justifying their selections. This should include:
   - all necessary technical information to confirm the type, scope and requirements of the activity
   - tools and equipment
   - materials, components and consumables
   - wastage and disposal requirements
   - time needed to carry out the activity
   - fault diagnosis methods to be used
   - any access requirements

b) produce and complete a risk assessment

c) produce a method statement.

Task 2 – Perform the maintenance activities

Candidates must:

a) prepare the work area for the maintenance activities

b) perform the maintenance activities in accordance with the method statement and planning documents produced in Task 1. This should include:
   - decommissioning and inspection of the system
   - disassembly and reassembly of the system
   - diagnosing and recording faults within the system, including carrying out appropriate tests
   - repairing the faults and replacing components as required
   - safely using the appropriate tools and equipment
   - recommissioning of the system
   - re-instating the work area

c) record the maintenance activities, to include:
   - calibration results
   - completed test record sheets
   - updated maintenance records and control documents
   - annotated method statement, including any recommendations for further investigation if required.

Task 3a – Review and report the maintenance activities

Candidates must:

i. produce a technical report for the supervisor. This should be approximately 850 words and include:
   - a review of the maintenance activities, including fault diagnosis/detection techniques and suggestions for future improvements
   - the faults found and how they were rectified
   - any outstanding faults, including recommendations that may require attention before the next planned maintenance activity according to the current maintenance schedule
   - reporting of stock levels and waste disposal.

ii. produce a revised maintenance schedule from their activities and findings, this should include:
   - recommendations for future planned maintenance including justifications
   - due date of next maintenance activity.

OS Exemplar Assessment – Control & Instrumentation

Task 3b – Peer review

The candidate's maintenance schedule will now be reviewed by two peers to provide the candidate with feedback. All candidates will also peer review two maintenance schedules. Assessors must distribute the maintenance schedules for candidates to review and provide peer review forms for candidates to complete the written feedback.

Candidates must:

i. carry out a peer review on two maintenance schedules provided by the assessor. Candidates must consider the following:
   - *how well does the schedule enable planned maintenance activities to be performed and recorded over time?*
   - *how appropriate are the recommended planned maintenance intervals and why?*
   - *what are the implications to the business of the proposed maintenance schedule?*
   - *how could the maintenance schedule be optimised/improved?*

ii. write up feedback for each of the maintenance schedules on separate peer review forms

iii. update your maintenance schedule following feedback from the peer review. Any updates need to include justifications for these changes and any changes not made will be reviewed in the handover.

Task 4 – Complete handover

Candidates must now hold a meeting with the client to return to service and complete handover procedures, including:

- demonstration of system functionality
- confirmation of work completed
- amended maintenance schedule and how they addressed peer review feedback, including any suggested changes that were not made and why
- appropriate handover documentation.

Conditions of assessment:

- the time allocated for this task is 1 hour:
  - 30 minutes to prepare for the handover meeting and 30 minutes to carry out the handover meeting
- candidates must carry out the task on their own, under **controlled conditions** while being observed
- candidates must be given copies of their completed documentation from Tasks 1, 2 and 3
- candidates must carry out the handover meeting, with the assessor taking the part of the client
- there will be no interaction required or permitted as part of the handover.

Technical Qualification - Maintenance, Installation & Repair for Engineering and Manufacturing

Occupational Specialism – Light & Electric Vehicle

MIR Light & Electric Vehicle (page 37 onwards in specification)

Component	Assessment method	Overview and conditions
Occupational Specialism assignment	Externally set, externally moderated	This assignment is **externally set, internally marked and externally moderated**, and is designed to require the learner to identify and use effectively in an integrated way an appropriate selection of skills, techniques, concepts, theories and knowledge from across the occupational area. Assignments will be released to centre staff towards the end of the learners' programme, usually the week before Easter each year. Centres will be required to maintain the security of all live assessment materials until assessment windows are open. Assignments will therefore be password-protected and released to centres through a secure method. Guidance on equipment, resources and duration will be released as appropriate to ensure centres can plan for delivery of practical assignments in advance. Learners who fail the occupational specialism following the first submission can retake in any assessment window. Please note that for externally set assignments City & Guilds provides guidance and support to centres on the marking process and associated marking grid in the assessment pack for the qualification, and guidance on the use of marking grids.

Component	Assessment method	Overview and conditions
Light and Electric Vehicles	Externally set, externally moderated	**Content overview** Learners will be able to: • Analyse and interpret requirements for vehicle maintenance, servicing and repair • Plan and prepare for vehicle maintenance, servicing and repair activities • Perform maintenance, servicing and repair of vehicles • Review and evaluate vehicle maintenance, servicing and repair activities • Communicate vehicle maintenance, servicing and repair information **Assessment overview:** Learners will be assessed against the following assessment themes: • Health and safety • Planning and preparation • Systems and components • Working with faults • Reviewing and reporting

Specification – Light & Electric Vehicle (page 193 onwards)

Knowledge (page 195 onwards)

Practical Skills (page 206 onwards)

Underpinning knowledge outcomes

On completion of this specialism, learners will understand:

1. Light and electric vehicles knowledge criteria

Performance outcomes

On completion of this specialism, learners will be able to:

2. Analyse requirements, specifications and technical information to enable the delivery of successful maintenance, installation, servicing and repair of vehicles.

3. Plan and prepare the maintenance, installation, servicing and repair of vehicles, taking into account the specific requirements and context.

4. Perform relevant maintenance, installation, servicing and repair of vehicles, using appropriate techniques and procedures to achieve the required quality outcomes and solutions.

5. Review and evaluate activities to help improve workplace systems and processes associated with vehicle maintenance, installation, servicing and repair, demonstrating commercial awareness and accountability.

6. Communicate vehicle maintenance, installation, servicing and repair information, proposals and solutions, producing, recording and explaining relevant technical information.

Completion of this specialism will give learners the opportunity to develop their Maths, English and Digital Skills. Details are presented at the end of the specification.

315 Light and electric vehicles

Level:	3
GLH:	680
Assessment method:	Practical assignment

What is this specialism about?

The purpose of this specialism is for learners to know fundamental light and electric vehicle systems and undertake key procedures for maintenance and repair. Learners will have the opportunity to plan, perform and evaluate their work whilst utilising a range of materials, tools and equipment.

Learners will develop their knowledge and understanding of, and skills in:

- Knowledge of electrical systems and components, power sources, power units, and engine types
- Knowledge and application of component classification, numbering and referencing systems
- Knowledge of how components are removed, replaced, and repaired as part of vehicle maintenance activities
- Skills to plan and prepare vehicle maintenance activities using evaluation
- Skills to select and use tools, equipment, and technology safely and effectively to complete vehicle maintenance, servicing, and repair activities

Learners may be introduced to this specialism by asking themselves questions such as:

- How do light and electric vehicle systems operate and function?
- What components are used in light and electric vehicle systems?
- How are maintenance and repair activities to light and electric vehicles planned and carried out?

OS Exemplar Assessment – Light & Electric Vehicle

2. Assignment brief

You have recently qualified as a vehicle technician at a main dealer, and as part of your development your manager has asked you to carry out work to two vehicles to assess your knowledge and skills before placing you on the manufacturer's development programmes.

The first vehicle has come in for a full vehicle service.

The specification for vehicle 1 is:

- four stroke petrol/common-rail diesel engine.

The full service for this vehicle must include as a minimum:

- external body work inspection
- windscreen and wiper blades
- lights
- seatbelts
- tyres, brakes and suspension
- filters
- fluids
- batteries.

The following has also been reported:

- customer complaining of a juddering when applying the brakes
- the engine management light (EML) is illuminated
- the exhaust needs to be extended to meet manufacturer's guidelines by welding an extension onto the existing exhaust.

The second vehicle has come in for general maintenance and repair.

The specification for vehicle 2 is:

- hybrid/electric vehicle.

The following has been reported:

- the high voltage battery light and malfunction induction lamp (MIL) are both illuminated
- unusual vibration noticed when travelling between at speeds 50mph and 60mph.

To complete the tasks, you must:

- plan the service, maintenance and repair activities for both vehicles
- perform the service and maintenance activities, including diagnosing any faults and completing subsequent repairs
- review and report the findings of the service and maintenance completed.

This assignment has a time allocation of 22 hours.

Time

The time allocated for the completion of the tasks and production of evidence for this assessment is 22 hours. Timings for completion of specific tasks are outlined below.

- Task 1 – 5 hours
- Task 2a – 4 hours
- Task 2b – 2 hours
- Task 2c – 5 hours
- Task 3 – 5 hours
- Task 4 – 1 hour

When working under supervised conditions for longer sessions, breaks can be facilitated outside of the controlled conditions, ensuring the room is locked and all candidates have vacated once the break begins. All materials must be kept securely during the break.

Each task should be administered separately, and each task should be completed and submitted by all candidates before moving onto the next.

The vehicles provided must have faults built in, **two** faults on **each** vehicle, for candidates to diagnose and repair. These **must** be as follows:

- Vehicle 1:
  - brake disc run out in excess of manufacturer's specification
  - open circuit lambda sensor
- Vehicle 2:
  - the high voltage battery light and MIL are both illuminated due to faulty isolator switch where the prongs have corroded so no longer making contact
  - unusual vibration noticed when travelling at speeds between 50mph and 60mph due to imbalanced tyres.

OS Exemplar Assessment – Light & Electric Vehicle

Task 1 – Plan the service, maintenance and repair activities

Candidates must analyse the brief and technical information about both vehicles provided and then:

a) create a list of the requirements and resources to complete the activities on both vehicles, including the full service, maintenance and welding activities, justifying their selections. This should include:
   - all necessary technical information to confirm the type, scope and requirements of the activities
   - tools and equipment
   - materials, components and consumables
   - wastage and disposal requirements
   - time needed to carry out the activity
   - fault diagnosis methods to be used
   - any access requirements

b) produce and complete a risk assessment to cover both vehicles, including the full service, maintenance working with high voltage systems and welding

c) produce a job card for each vehicle and welding activity.

Task 2a – Perform a full service and maintenance on vehicle 1

Candidates must:

i. prepare the working area to complete the full service and maintenance on vehicle 1

ii. perform the full service and maintenance on vehicle 1 in accordance with the planning documents produced in Task 1. This should include:
   - decommissioning and inspection of the vehicle systems
   - diagnosing and recording faults within the vehicle systems, including carrying out appropriate tests and measurements
   - replacing components and consumables as required in the service schedule and any fault diagnosis
   - safely using the appropriate tools and equipment
   - recommissioning of the vehicle
   - re-instating the work area

iii. record the full service and maintenance, to include:
   - completed service sheets
   - completed job card with description of work carried out.

Task 2b – Perform the joining activity

You must provide candidates with a steel exhaust pipe and 500mm extender.

Candidates must:

i. prepare the working area to complete welding activities

ii. perform the activity in accordance with the planning documents produced in Task 1, which should include:
   - preparing the exhaust pipe and extender surfaces for welding
   - complete the welding requirements
   - safely using the appropriate tools and equipment
   - re-instating the work area
   - completing the job card for the welding activity with a description of work carried out.

Task 2c – Perform maintenance and repair activities on vehicle 2

Candidates must:

i. prepare the work area for the maintenance and repair activities on vehicle 2

ii. perform the maintenance and repair activities on vehicle 2 in accordance with the planning documents produced in Task 1. This should include:
   - decommissioning and inspection of the vehicle systems
   - disassemble and reassemble the relevant system(s)
   - diagnosing and recording faults within the systems, including carrying out appropriate tests and measurements
   - safe isolation of the high voltage system
   - repairing faults and replacing components as required
   - safely using the appropriate tools and equipment
   - re-energising the high voltage system and recommissioning the vehicle
   - re-instating the work area

iii. record the maintenance and repair activities, to include:
   - completed job card and any control documents
   - record of measurements and tests completed.

OS Exemplar Assessment – Light & Electric Vehicle

Task 3a – Review and report the service, maintenance and repair activities

Candidates must:

i. produce a technical report for your manager, covering both vehicles and includes the service, maintenance and welding activities. This should be approximately 850 words and should include:
   - a review of the service, maintenance and welding activities, including fault diagnosis/detection techniques used and suggestions for future improvements
   - the faults found and how they were rectified
   - any outstanding faults, including recommendations that may require attention before the next planned maintenance activity according to the current maintenance schedule
   - reporting of stock levels and waste disposal

ii. produce a revised maintenance schedule for vehicle 1 from your activities and findings, this should include:
   - recommendations for future planned maintenance including justifications
   - due date of next service and maintenance activity.

Task 3b – Peer review

The candidate's maintenance schedule will now be reviewed by two peers to provide the candidate with feedback. All candidates will also peer review two maintenance schedules. Assessors must distribute the maintenance schedules for candidates to review and provide peer review forms for candidates to complete the written feedback.

Candidates must

i. carry out a peer review on two maintenance schedules provided by the assessor. Candidates must consider the following:
   - *how well does the schedule enable planned maintenance activities to be performed and recorded over time?*
   - *how appropriate are the recommended planned maintenance intervals and why?*
   - *what are the implications to the business of the proposed maintenance schedule?*
   - *how could the maintenance schedule be optimised/ improved?*

ii. write up feedback for each of the maintenance schedules on separate peer review forms

iii. update your maintenance schedule following feedback from the peer review. Any updates need to include justifications for these changes and any changes not made will be reviewed in the handover.

Task 4 – Complete handover

Candidates must now hold a meeting with the manager to return to service and complete handover procedures, including:

- demonstration of vehicle functionality
- confirmation of work completed
- amended maintenance schedule and how they addressed peer review feedback, including any suggested changes that were not made and why
- appropriate handover documentation.

How we support you

Updates/Topics/Networks

Blended approach to communication

Provider networks and events

e-bulletin content and email updates

Website

Support and Guidance

Ready to support eligible providers and stakeholder engagement

- Timeline
- Provider focus groups
- Employer Industry Boards
- e-bulletins
- Specification
- Resource Hub https://www.cityandguilds.com/tlevels/resources
- Learner flyer t-levels-learner-flyer-engineering-and-manufacturing
- Dedicated Technical Advisors

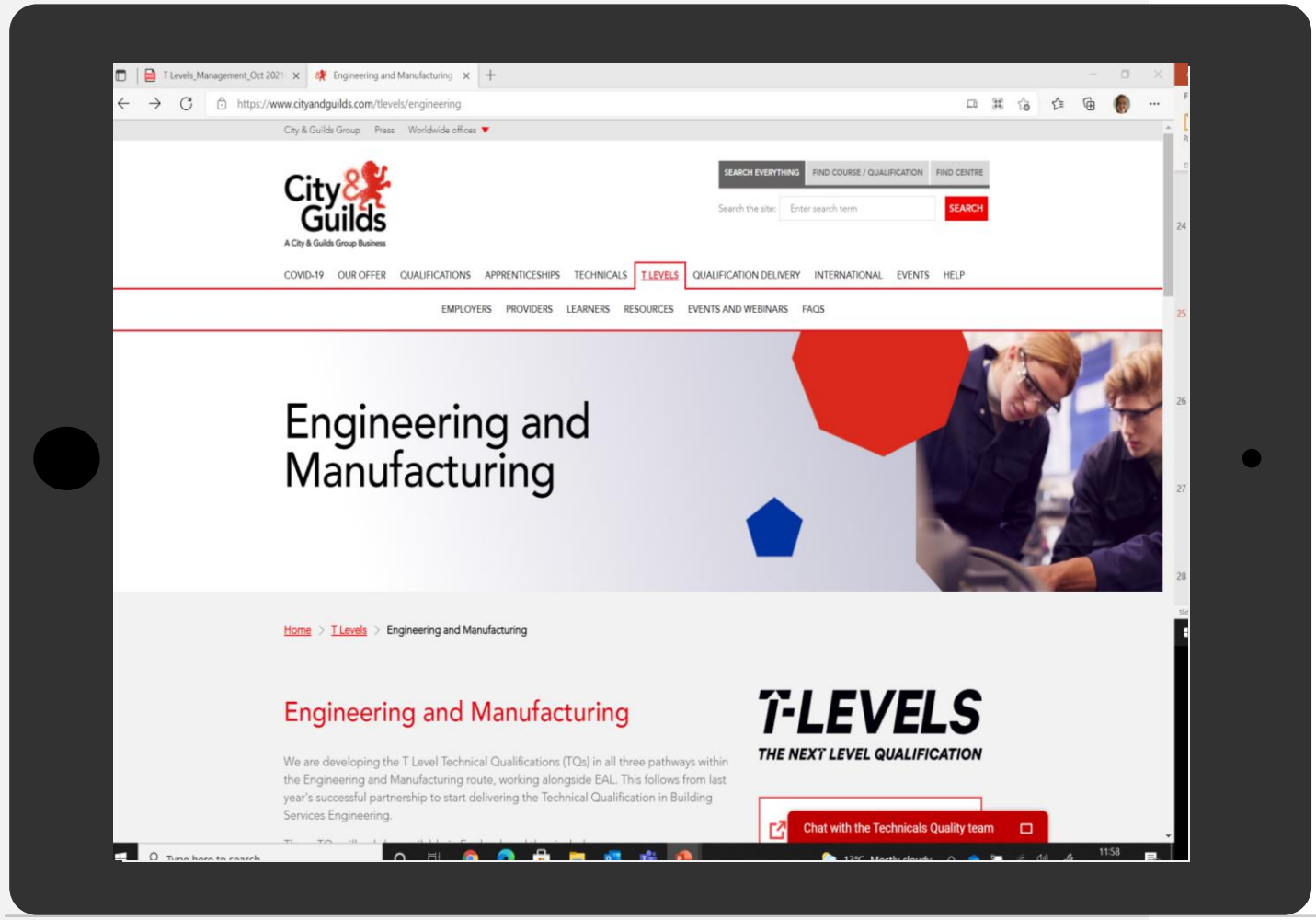

https://www.cityandguilds.com/tlevels/providers

Events & Webinars

- Resource development for the core
- Teaching & Learning support for exam component
- Face-to-face events
- Events, networks and webinars are located on our T Level Home page here under the accordion Engineering & Manufacturing. Here you will also find copies of the slide decks presented in the events, networks and webinars.
- Recorded webinars on our dedicated Engineering Go To Webinar Channel here.
- For the most up to date information regarding future events please register for our T Level e-bulleting at the bottom of this webpage, here.
- (**18.11.22,** 14.45-15.45 GMT) Network event (recorded) T Level familiarisation MPC for Engineering & Manufacturing
- (**18.01.23,** 14.45-15.45 GMT) Network event (recorded) Curriculum Plan & delivery models

Websites to Support Providers

T Level Industry Placement Delivery Guidance
T Level industry placements delivery guidance - GOV.UK (www.gov.uk)

Introduction to T levels
T levels - GOV.UK (www.gov.uk)

How T Levels are funded
How T Levels are funded - GOV.UK (www.gov.uk)

T Levels capital fund
T Levels capital fund - GOV.UK (www.gov.uk)

T Levels resources for teachers and careers advisers
T Levels resources for teachers and careers advisers - GOV.UK (www.gov.uk)

T Levels: next steps for providers
T Levels: next steps for providers - GOV.UK (www.gov.uk)

Supporting with delivering T Levels
Support with delivering T Levels

T Level Transition Programme Framework for 2022 – 2023
T Level Transition Programme Framework for Delivery 2022 to 2023 - GOV.UK (www.gov.uk)

ETF Foundation – T Levels
T Level Professional Development - Education & Training Foundation (et-foundation.co.uk)

COMING SOON!

Engineering and Manufacturing T Level: Core Textbook

Tackle the core component of your Engineering and Manufacturing T-Level head on with this comprehensive textbook published in association with City & Guilds.

- Complete coverage of the T Level's core component
- Prepares students for core exams and ESP
- Publishing Spring 2023
- Available in print and digital formats
- Print: 9781398360921 // £34
- Boost eBook: 9781398361058// £11 per year
- From expert authors Paul Anderson and David Hills-Taylor

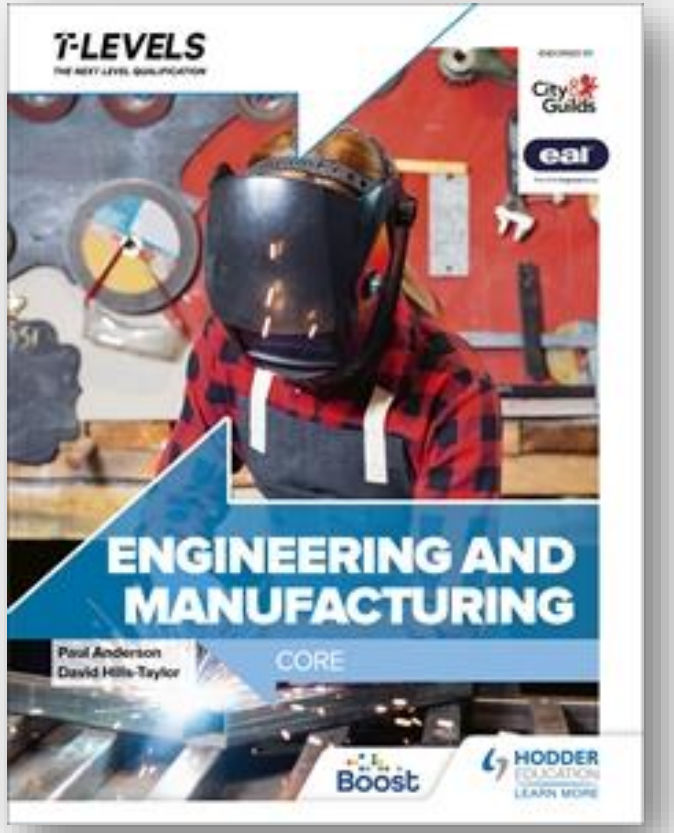

Contact Gemma Simpson to receive an advance sample chapter:
gemma.Simpson@hoddereducation.co.uk

HODDER EDUCATION
LEARN MORE

Visit www.hoddereducation.co.uk/t-levels

T Level Associate Vacancies

Would you like to be involved with supporting the delivery of T-Levels?

- **Principal Moderators / Moderators**

Ensure a standardised and consistent approach to quality assurance, moderation, feedback and processes

- **Technical Qualification Associates (TQAs)**

Review Eligible Provider approval applications, including supplementary evidence and carry out approval and support activities.

- **Chief/Principal Examiners**

Produce and submit assessment materials and participate in all stages of the production process until sign off.

- **Marking Examiners**

Mark candidates' scripts/evidence in accordance with the agreed marking scheme/criteria within the agreed timescale

For further information, please contact Samantha.Ashman@cityandguilds.com or visit our website on the attached link: Associate Vacancies | City & Guilds Group Careers

T-LEVELS | Institute for Apprenticeships & Technical Education

T-LEVELS

Questions?
Thank you for attending

November 2022

'T LEVELS' is a registered trademark of the Department for Education.
'T Level' is a registered trademark of the Institute for Apprenticeships and Technical Education.

City & Guilds | eal