T Level Technical Qualification in Design and Development for Engineering and Manufacturing (8730-14)

8730-035 Employer-Set Project Exemplar – A Grade

Summer 2024

Contents

Introduction **2**

Task 1 Research **5**

Task 2 Design **22**

Task 3 Plan **34**

Task 4 Present **35**

Introduction

Summer 2024 Results

This document is aimed at providers and learners to help understand the standard that was required in the summer 2024 assessment series to achieve an A grade for the 8730-035 Design and Development for Engineering and Manufacturing Employer-Set Project (ESP).

Providers and learners may wish to use it to benchmark the performance in formative assessment against this to help understand a potential grade that may be achieved if a learner was to attempt the next summative assessment series.

The Employer-Set Project is graded A* to E and Unclassified.

The exemplar evidence provided for the A grade displays the holistic standard required across the tasks to achieve the A grade boundary for the summer 2024 series.

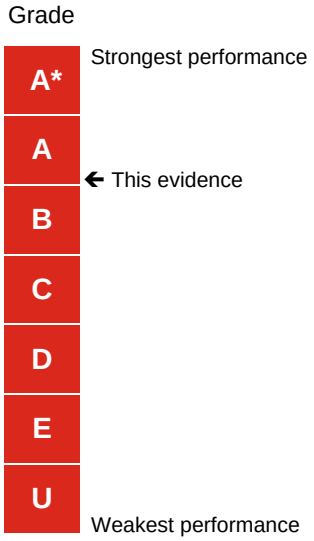

The Employer-Set Project brief and tasks can be downloaded from here.

Important things to note:

- We discussed the approach to standard setting/maintaining with Ofqual and the other awarding organisations before awarding this year. We have agreed to take account of the newness of qualifications in how we award this year to recognise that students and teachers are less familiar with the assessments (grading-arrangements-for-vtqsand-technical-qualifications-within-t-levels-in-the-academic-year-2023-to-2024) whilst also recognising the standards required for these qualifications.

- The exemplar evidence presented, as a whole, was sufficient to achieve the A grade. However, performance across the tasks may vary (i.e. some tasks completed to a higher/lower standard than an A grade).

Marking of this Employer-Set Project is by task and Assessment Objective, below is a summary of these along with the mark achieved by the evidence presented and the maximum mark available for each aspect.

Task	Assessment Objectives	Mark achieved	Max mark available
Task 1 Research	- AO1 Plan their approach to meeting the project brief - AO2a Apply core knowledge - AO3 Select relevant techniques and resources to meet the brief	7	9
	- AO2b Application of core skills	4	6
Task 2 Design	- AO1 Plan their approach to meeting the project brief - AO3 Select relevant techniques and resources to meet the brief	5	6
	- AO2a Apply core knowledge	4	6
	- AO2b Application of core skills	4	6
	- AO5a Realise a project outcome – was the right outcome achieved - AO5b Review how well the outcome meets the brief, how well the brief was met, the quality of the outcome in relation to the brief	4	6
Task 3 Plan	- AO1 Plan their approach to meeting the project brief - AO3 Select relevant techniques and resources to meet the brief	3	6
	- AO2a Apply core knowledge	4	6
	- AO2b Application of core skills	2	6
Task 4 Present	- AO1 Plan their approach to meeting the project brief - AO3 Select relevant techniques and resources to meet the brief	5	6

	- AO2a Apply core knowledge	5	6
	- AO2b Application of core skills	4	6
	- AO5a Realise a project outcome – was the right outcome achieved - AO5b Review how well the outcome meets the brief, how well the brief was met, the quality of the outcome in relation to the brief	5	6
Maths	- AO4a Use of Math skills	2	3
English	- AO4b Use of English skills	2	3
Digital skills	- AO4c Use of digital skills	2	3

What evidence was being assessed for the maths, English and digital skills:

Maths:

- Annotations on sketches (Task 2)
- Dimensioning and scaling CAD drawing (Task 2)
- Electrical power requirements (Task 2)
- Calculation of design and manufacturing cost, timescales and critical path within the Programme of work (Task 3)

English:

- Technical brief (Task 1)
- Notes detailing how the designs meet the brief requirement (Task 2)
- Supporting statement for the programme of work (Task 3)
- Presentation delivery (orally) and materials to support presentation (e.g. slides etc) (Task 4)

Digital:

- Types of sources used for Research (Task 1)
- CAD Drawing (Task 2)
- Presentation of the programme of work (Task 3)
- Presentation materials (slides, handouts, notes etc) (Task 4)

Task 1 Research

Assessment number (eg 1234-033)	8730-035
Assessment title	Employer-Set Project

Candidate name	<first name> <surname>
City & Guilds candidate No.	ABC1234

Provider name	<provider name>
City & Guilds provider No.	999999a

Task(s)	1
Evidence title / description	**Evidence expected for marking:** **Part A** Research notes including a list of references/sources **Part B** Technical brief (typically 1500 words) **Evidence submitted for marking:** **Part A** Research notes including a list of references/sources **Part B** Technical brief (typically 1500 words)
Date submitted by candidate	DD/MM/YY

Employer set project

Task 1 - Research

Research points:

- Suitable and sustainable material options
- Suitable technology options for: Alert system, Tracking system, Renewable power source
- Aesthetic design features and standard buoy fixings
- Costings of manufacture of the buoy in relation to budget
- Health and safety requirements

Project spec:

- Client company - Harbour Shipping Ltd.
- Wish to improve visibility of shipping lanes into the harbour - Colour coded meanings
- Want to design buoys that can be tracked and found it they drift away
- Fitted with a trackable system - Could be a GPS tracker with power source
- Bespoke buoy - New, unique, typical buoys:

(Dorset Marine Training - 1)

- Material must be able to withstand the harsh environment of the sea - weather and corrosion resistant, stable, tough

Specific performance requirements:

- Height between 1400 mm and 1800 mm above sea level
- Base diameter of 500 mm
- Tolerance +/- 25 mm
- Use standard fixings
    - Standard fixings for buoys include chain, rope, inductive cable, u-bolt anchors, and Manta-ray anchors
    - Chain fixings consist of many chain links, being of any desired length and width, which connect the buoy to the seabed or a small concrete block
    - Rope fixings simply consist of a single, or multiple, interwoven ropes connecting the base of the buoy to the seabed or a small concrete block
    - Inductive cable, or ‘plastic-jacketed steel mooring line’ (Sea-Bird scientific - 2), are commonly used for non-inductive buoy fixings due to their corrosion resistance provided by the plastic jacket
    - U-bolt anchors consist of a material, usually stainless steel, being bent into a U shape, and then being threaded through the base of a buoy and held in place by washers, nuts, and backing plates. A rope, cable, or chain is then attached to the U-bend and holds it in place from the seabed. U-bolt anchors provide two separate load points, meaning the buoy will have improved stability and strength of fixing.

(Proboat - 3)

    - Manta ray anchors are flat plates that are driven into the seabed by use of a driving shaft and hydraulic hand-held jackhammers. The drive shaft is then pulled out, and then the rod is pulled, which twists the anchor from vertical to horizontal in the seabed, causing the buoy to be held firmly in place. The seabed is not affected or loose, and it compacts itself around the anchor. Manta-ray anchors can withstand tensile loads of up to 20 tonnes. They require very little labour, and little time taken to implement them.

(Premium Technical services - 4)

- Green coloured for entering harbour
    - Luminescent or bright green paint
- Red coloured for leaving harbour
    - Luminescent or bright red paint
- Alert system if cable fixing breaks
    - Set range of over maximum movement of buoy programmed into software, if the buoy strays further than set area, programme triggers a warning on tracking software at remote station by use of ‘an improved radio-buoy system, for ranges less than 100 km, is a drifter-borne Doppler transponder that is tracked by a pair of HF Doppler radar systems located on shore or on offshore platforms’ (Science direct, Measuring Ocean Currents, 2014 - 7).

(Weibel Doppler Radars - 8)

- Tracking system on buoy
    - GPS within buoy
- Secure, watertight, and accessible place to hold battery and electrical circuit
    - Battery and circuit are held within the buoy body above the water level, with an access hatch on top of the buoy. The access hatch will have a resin (Marine epoxy) seal between its male and female parts to keep it watertight and secure. Whole buoy galvanised as well.
- Renewable power source that can provide 12V supply
    - Solar panel atop buoy
    - Underwater turbine beneath and connected to buoy. Water flow and tides constantly turn the turbine, which is connected to a generator and thus produces power and electricity.
    - Generator and wheel atop the buoy, hollow tube where a spring sits, as tide and water changes, flat base is pushed up and down, which in turn

(connected to wheel), pushes the wheel around and produces electricity and power.

- Made from materials that will not easily rust or corrode

  -Materials could be:

  - FRP, Fibre-reinforced polymer is lightweight, corrosion, impact, and wear resistant, very durable and stiff, and has flexural strength. However it has low strength in comparison to metals and a high production cost. Costs around £1.23 p/kg
  - Marine-grade stainless steel (SAE 316 grade), strong with high tensile strength, ideal for reinforcement, high corrosion, rust, and saltwater resistance, and has higher tensile and impact strength. However grade 316 steel costs more than other materials, about £1.40 p/kg, and processing it is hard due to its hardness.
  - Syntactic foam, provides buoyancy and weight reduction, ‘Syntactic marine foam systems possess exceptional strength and are resistant to moisture, water, and chemicals’ (Synfoam - 5), it acts as an insulator so is ideal for flotation devices that will utilise electrical components. However, it is not as impact resistant as other materials.
  - Marine grade HDPE (High Density Polyethylene) plastic is very resistant to marine conditions, it has high impact strengths, excellent tensile strength, energy absorption, abrasion resistance to stress cracks, a decorative, textured surface, minimal showing of wear, dirt, & scratches, and is available in a variety of colours. (Emco industrial plastics - 6). However it costs around £2.50 p/kg, more than some other materials
  - Whole buoy galvanised £3 per coating

- Visible from distance
  - Brightly painted, and a colour coordinated flashing light on top that comes on at night (connected to electrical circuit and power supply, activated and deactivated at day and night by use of an LDR)
- Modern shape, ergonomic design, and aesthetic features
  - Ergonomic design; comfy handles with good grip, mooring mounts for emergency mooring, not an awkward shape, ladder to use to access the hatch.
  - Aesthetic features, nice colouring, chamfered or filleted edges, none sharp.
- Withstand minor impacts
  - Boats bumping it, waste in the sea colliding with it lightly.
- Placed in a harbour

- Budget of £2000 p/buoy

Manufacturing:

- For metals, presswork and some powder metallurgy - Around £1000 each
- For plastics, blow-moulding or compression moulding - Around £1500 each
- For syntactic foam, mould-cavity forming - Between £200 and £800 pounds depending on size.
- All buoys 50kg

Budget:

- Budget of £200,000 overall
- £2000 per buoy, materials, manufacturing, finishing
    - Materials:
    - Chain fixing - £20 x 100 = £2000
    - Rope fixings - £5 x100 = £500
    - Cable - £50 x 100 - £5000
    - U-bolt anchor - £7.50 x 100 = £750
    - Manta ray anchor - £150 x 100 = £15,000
    - Syntactic foam, £1.30 p/kg x 50kg x 100 = £6500 total
    - Marine grade HDPE, £2.50 p/kg x 50kg x 100 = £12,500 total
    - Manufacturing, total cost for all manufacturing of any type of material is £10,000 overall setup and cost (not including material expense)
    - Finishing:
    - Green and red paint £10 x 100 = £1000
    - Galvanising £3 x 100 = £300
    - Lightbulb £30 x 100 = £3000

Project duration:

- Total production of 100 buoys
- Assume manufacturing capacity is 2 buoys p/week
- Required overall timeline of 70 weeks for complete design, prototype development and manufacturing.

Health and safety:

- COSHH, manufacturing and finishing

Bibliography:

1 - Dorset Marine Training, retrieved from: https://dorsetmarinetraining.co.uk/2021/02/21/buoyage-navigation-marks-and-buoys/

2 - Sea-Bird scientific, retrieved from: https://www.seabird.com/eBooks/IM-Explained-Sea-Bird-Scientific-2019

3 - Proboat, retrieved from: https://www.proboat.co.uk/category/1/93/A-Bolts-and-U-Bolts

4 - Premium Technical services, retrieved from: https://premiumtechnical.com/what-is-manta-ray/manta-ray-how-it-works/

5 - Synfoam, retrieved from:

https://synfoam.com/Markets/Marine

6 - Emco industrial plastics, retrieved from: https://www.emcoplastics.com/hdpe-marine-grade/

7 - Science direct, Measuring Ocean Currents, 2014, retrieved from: https://www.sciencedirect.com/topics/earth-and-planetary-sciences/buoy-system

8 - Weibel Doppler Radars, retrieved from: https://www.google.com/url?sa=i&url=https%3A%2F%2Fweibelradars.com%2Finstrumentation%2Ftransponder-solutions%2F&psig=AOvVaw1MVdUGkaeO56XgVumSa3yS&ust=1710847318780000&source=images&cd=vfe&opi=89978449&ved=0CBMQjRxqFwoTCOivw4jZ_YQDFQAAAAAdAAAAABAD

Harbour Shipping LTD.

Buoy Technical Brief

For the set brief provided by Harbour shipping LTD, I have compiled a brief outlining potential concepts, materials, manufacturing processes, technologies, power sources, design features, and requirements based on the client's budget.

Maritime Shipping Lane Buoys:

Shipping lanes are reliant upon the buoys used to mark them out and ensure their efficiency and safety of the lanes whilst in use by ships. They must be visible, and in accordance with maritime standards, as well as being manufactured out of appropriate materials.

(Dorset Marine Training - 1)

As specified by the brief, the client company requires 2 types of buoy, both shipping lane buoys of same size (1400 mm to 1800 mm above sea level with 500 mm base), design, and shape, but of differing colours. The two colours will be

green for the shipping lane to enter the harbour, and red for the shipping lane to exit the harbour. All buoys will contain a fixing, a battery, a power source, an electrical circuit, a tracking device, an alert system, and suitable materials in accordance to the brief. The battery, electrical circuit, and tracker will all be housed within the buoy. This area will be accessible by means of an access hatch atop the buoy that is weather proofed and watertight through using a marine resin on the hatch seal.

With visibility a necessity, the buoys will be painted a bright green or red, giving them the ability to be seen from distance. When it come to ships using the shipping lanes at night, the buoys will be visible as not only are the buoys painted in night-luminescent paint, but they will also have a marine signal light at their peak which either shines green or red light in accordance with their role; whether it is a buoy marking an entrance or exit lane. This light will be connected to the electrical circuit and activated by a Light Dependent Resistor. A renewable power source will provide electricity to the buoy, meaning that the light, alert system, and tracking device will all have 24/7 activation.

Materials:

The materials used for the buoy must be appropriate to both the task, the client's requirements, and the product's environment. The materials must be able to withstand minor impacts, resist corrosion and wear, be buoyant to stay afloat and have numerous marine properties in order to be effective.

One material option for the buoys is Fibre-Reinforced Polymer (FRP). Fibre-Reinforced Polymer is a very apt material for the buoys to be manufactured from,

as they possess many marine qualities which lie in accordance with the briefs requirements. Fibre-reinforced polymer is lightweight, corrosion, impact, and wear resistant, extremely durable and stiff, and has flexural strength. Fibre-Reinforced Polymers therefore make very durable buoys which require very little maintenance, however it has low strength in comparison to metals and a high production cost. Fibre-Reinforced Polymer has a cost of around £1.23 per kilogram of material, so for a 50 kilogram buoy, the total expenditure on material from the client's budget would equate to £6150.

Another option for the manufacturing material is Marine-grade stainless steel, 316 grade. This grade of stainless steel is especially designed for marine applications and has attributes such as being; strong with high tensile strength, ideal for reinforcement, having high corrosion, rust, and saltwater resistance, and having higher tensile and impact strength than other materials. However, grade 316 steel costs more than other materials, about £1.40 per kilogram, and processing it is hard due to its hardness. At £1.40 per kilo, the total expenditure on material would come to £7000 for 100 50 kilogram buoys. Due to grade 316 stainless steel being of higher weight than other materials, they would be less buoyant but still however float and act well as a buoy with strong properties.

Syntactic foam, a type of marine construction material, would also be a viable option for the buoys, as not only is it made of foam and therefore providing buoyancy and weight reduction, but it also has many major marine uses as well. 'Syntactic marine foam systems possess exceptional strength and are resistant to moisture, water, and chemicals' (Synfoam - 5), it acts as an insulator so is ideal for flotation devices that will utilise electrical components. Syntactic foam has less strength than other materials however, and does not provide the same impact resistance. At £1.30 per kilo, the total cost of 100 50 kg buoys would equal £6,500.

Lastly, Marine-grade HDPE (High Density Polyethylene) plastic. HDPE plastic is very resistant to marine conditions; it has high impact strengths, excellent

tensile strength, energy absorption, abrasion resistance to stress cracks, a decorative, textured surface, minimal showing of wear, dirt, & scratches, and is available in a variety of colours. (Emco industrial plastics - 6). However it costs around £2.50 per kilogram, coming out at £12,500 total material cost, a lot more than some other materials.

Fixings:

The buoy must be fixed to the seabed in order to maintain its position as a marking buoy. One fixing mechanism is a simple chain consisting of many chain links, being of any desired length and width, which connect the buoy to the seabed or a small concrete block. Chain fixings would cost £2000 pounds in total. Another viable option is a rope fixing simply consisting of a single, or multiple, interwoven ropes connecting the base of the buoy to the seabed or a small concrete block. These would cost £500.

Inductive cable, or 'plastic-jacketed steel mooring line' (Sea-Bird scientific - 2), are commonly used for non-inductive buoy fixings due to their corrosion resistance provided by the plastic jacket. This would fare well as a fixing for their environment, however as they are not especially strong, they may be more prone to breaking than other fixing options. This type of fixing would take £5000 out of the budget.

U-bolt anchors are a great fixing option. They consist of a material, usually stainless steel, being bent into a U shape, and then being threaded through the base of a buoy and held in place by washers, nuts, and backing plates. A rope, cable, or chain is then attached to the U-bend and holds it in place from the seabed. U-bolt anchors provide two separate load points, meaning the buoy will have improved stability and strength of fixing. A simple rope or chain fixing will then attach them to the seabed, or using a Manta-ray anchor to provide even more fixing strength. U-bolt anchors cost £750 total.

(Proboat - 3)

The last fixing option are Manta ray anchors. These are flat plates that are driven into the seabed by use of a driving shaft and hydraulic hand-held jackhammers. The drive shaft is then pulled out, and then the rod is pulled, which twists the anchor from vertical to horizontal in the seabed, causing the buoy to be held firmly in place. The seabed is not affected or loose, and it compacts itself around the anchor. Manta-ray anchors can withstand tensile loads of up to 20 tonnes. They require very little labour, and little time taken to implement them. However they are the most expensive fixing at a total cost of £15,000.

(Premium Technical services - 4)

Technology:

Technology is a key aspect of the buoy, as it is necessary for the alert system, tracker, and light bulb to operate.

Alert system:

If the buoy fixing breaks, an alert system is in place for the company to become aware of this. A set range of maximum movement the buoy can travel will be programmed, and if the buoy strays further than this set range, an alert will be set to a remote tracking station onshore buy use of ‘an improved radio-buoy system, for ranges less than 100 km, a drifter-borne Doppler transponder that is tracked by a pair of HF Doppler radar systems located on shore or on offshore platforms’ (Science direct, Measuring Ocean Currents, 2014 - 7).

(Weibel Doppler Radars - 8)

Tracking system:

The buoy requires a tracking system in the case that it becomes detached from its fixing and drifts away. The prevention measure in place is to place a GPS with the buoy, tracked by satellites and a control station.

Light bulb:

A light bulb will be atop the buoy that comes on at night and shines red or green in accordance with its role in either the exit or entrance lane. It will be activated and deactivated by use of a Light Dependent Resistor (LDR) which will trigger the electrical circuit and let voltage flow through the circuit to power the bulb. The LDR will activate the bulb at night and deactivate it within the day. The total cost for light bulbs comes to £3000 total, 100 light bulbs at £30 each.

Power source:

A renewable power source is required for the buoy, it needs to be able to provide 12V to the systems as listed above. One option for the source of power is to have a solar panel on the top of the buoy. This will create energy by use of the sunlight in the day, and generate enough power to let all the systems run consistently.

Another option for the power source is to have a column attached to the bottom of the buoy in the water. A turbine will be placed in the column which means that due to constant water flow and tide, it will always be turning and constantly be producing energy to power the necessary technology and systems within the buoy.

Design features:

Many aesthetic and ergonomic design features are available for the buoys. A quality finish, good coating of paint, and ergonomic features such as emergency mooring mounts, a ladder to access the hatch easily and comfortable handles with quality grip. They will not have an awkward shape, instead all sharp edges will be either chamfered or filleted in order for it to be more aesthetically pleasing and safer as well.

A design feature to improve the buoy's sea-faring and corrosion resistance is galvanising. The buoy will be coated in a thin layer of sacrificial zinc before it is painted its respective colour. This means that the zinc will corrode first, and protect the material underneath from corrosion by ‘sacrificing’ itself. Each buoy will cost £3 to be galvanised, totaling at £300 expenditure.

Another design feature that will be present is a marine seal on the access hatch opening. The battery and circuit are held within the buoy’s body above water level, with an access hatch on top of the buoy. The access hatch will have a resin (Marine epoxy) seal between its male and female parts to keep it watertight and secure. This will ensure that water does not get into the housing space, keeping the components within safe and operable.

Manufacture:

The manufacture of the buoys must fit within the budget and also be viable and appropriate to the requirements. Different options are available for different materials. For metals, presswork and some powder metallurgy - around £1000 each. For plastics, blow-moulding or compression moulding - around £1500

each. Finally for syntactic foam, mould-cavity forming or extrusion - between £200 and £800 pounds depending on size.

The maximum cost for each of the manufacturing processes equates to £12,000 each to set up and source the necessary equipment needed to manufacture. This does not include the total material costs.

The safety legislation COSHH will apply during the manufacturing and finishing part of the process, meaning that PPE and safety measures must be included in the budget.

Bibliography:

1 - Dorset Marine Training, retrieved from: https://dorsetmarinetraining.co.uk/2021/02/21/buoyage-navigation-marks-and-buoys/

2 - Sea-Bird scientific, retrieved from: https://www.seabird.com/eBooks/IM-Explained-Sea-Bird-Scientific-2019

3 - Proboat, retrieved from: https://www.proboat.co.uk/category/1/93/A-Bolts-and-U-Bolts

4 - Premium Technical services, retrieved from: https://premiumtechnical.com/what-is-manta-ray/manta-ray-how-it-works/

5 - Synfoam, retrieved from:

https://synfoam.com/Markets/Marine

6 - Emco industrial plastics, retrieved from:
https://www.emcoplastics.com/hdpe-marine-grade/

7 - Science direct, Measuring Ocean Currents, 2014, retrieved from:
https://www.sciencedirect.com/topics/earth-and-planetary-sciences/buoy-system

8 - Weibel Doppler Radars, retrieved from:
https://www.google.com/url?sa=i&url=https%3A%2F%2Fweibelradars.com%2Finstrumentation%2Ftransponder-solutions%2F&psig=AOvVaw1MVdUGkaeO56XgVumSa3yS&ust=1710847318780000&source=images&cd=vfe&opi=89978449&ved=0CBMQjRxqFwoTCOivw4jZ_YQDFQAAAAAdAAAAABAD

Task 2 Design

Assessment number (eg 1234-033)	8730-035
Assessment title	Employer-Set Project

Candidate name	<first name> <surname>
City & Guilds candidate No.	ABC1234

Provider name	<provider name>
City & Guilds provider No.	999999a

Task(s)	2
Evidence title / description	**Evidence expected for marking:** **Part A** Sketches for two designs (typically two A3 size drawings) Supporting Calculations **Part B** Annotated CAD drawing for one preferred design (typically two A3 size drawings) Reflective Notes **Evidence submitted for marking:** **Part A** Sketches for two designs (typically two A3 size drawings) Supporting Calculations **Part B** Annotated CAD drawing for one preferred design (typically two A3 size drawings) Reflective Notes
Date submitted by candidate	DD/MM/YY

Power Source

Option 1:

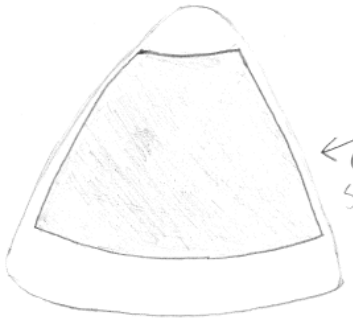

Custom built solar panels.

- Designed to wrap around or sit on buoys body.
- Placed onto a fixing and welded together

Example on 'Idea 1' Buoy

Option 2:

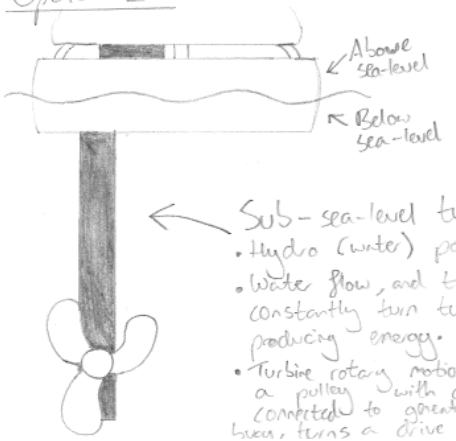

Sub-sea-level turbine

- Hydro (water) powered
- Water flow, and tide constantly turn turbine, producing energy.
- Turbine rotary motion pulls a pulley with column connected to generator within the buoy, turns a drive wheel, and produces energy.

Fixing options

Option 1:

Chain fixing, connected to U-bolt anchor on base of buoy.

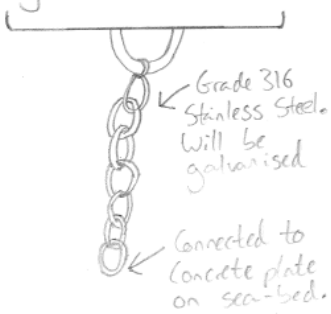

Option 2:

Rope Fixing, connected to U-bolt anchor on base of buoy.

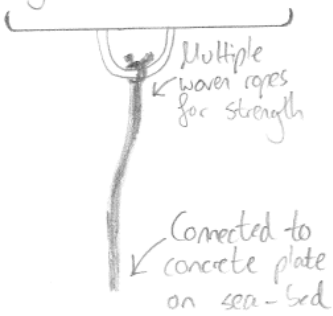

Option 3:

Inductive Cable, connected to U-bolt anchor on base of buoy.

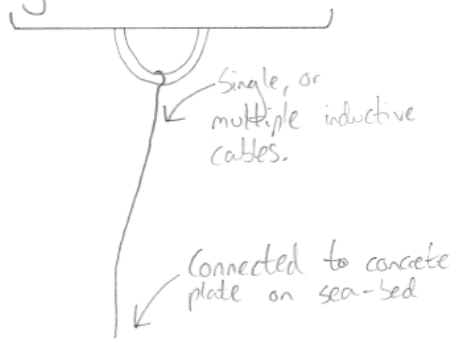

Option 4:

Manta-Ray anchor, connected to U-bolt anchor on base of buoy.

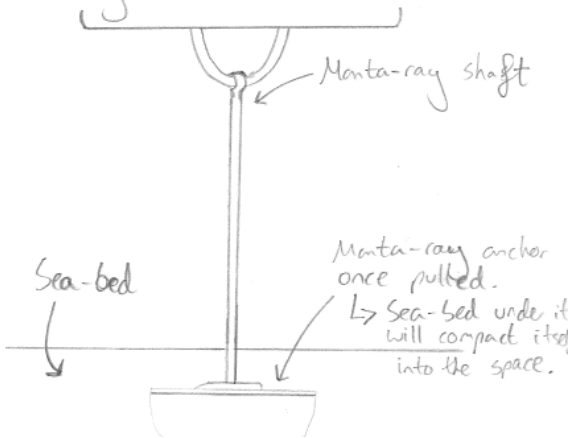

[redacted]

Buoy internal housing layout and plan

Will contain:

- Alert system transponder
- Tracker system GPS
- Electric Circuit + Motherboard
- Generator from power source

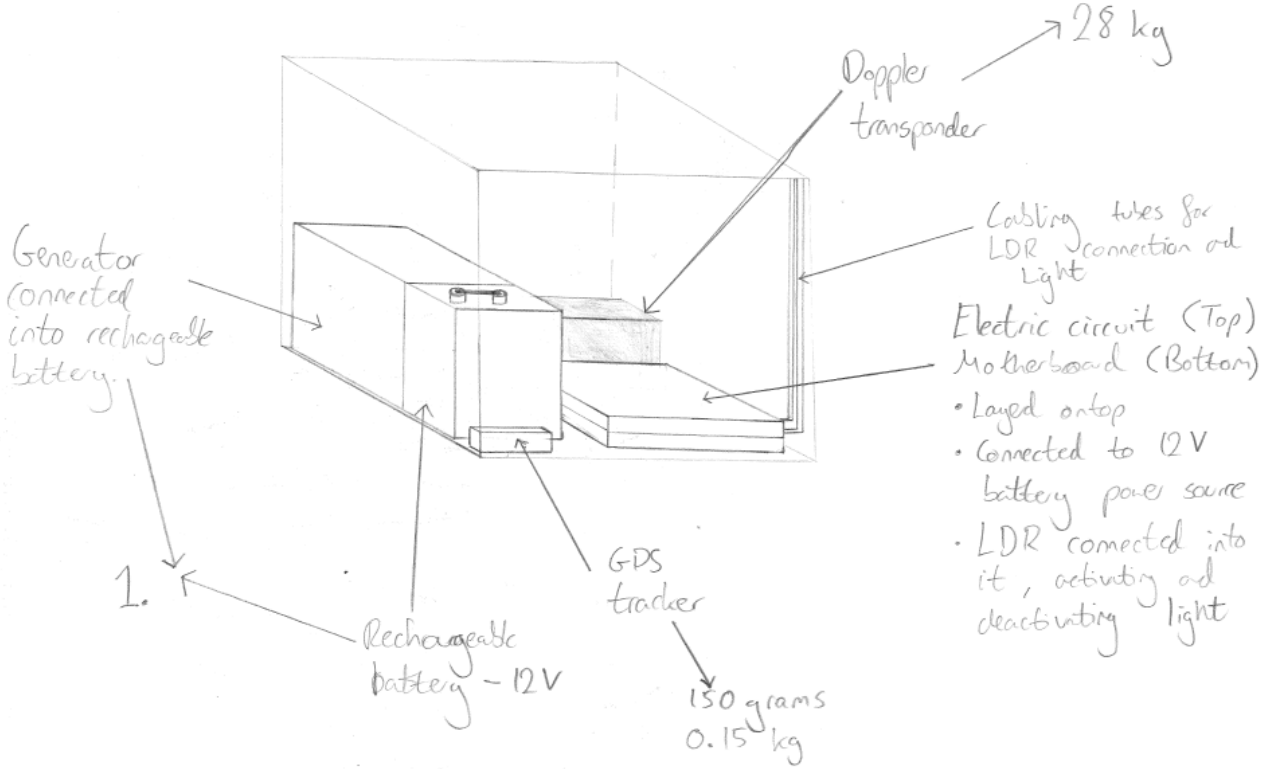

1. Power generation

Solar Panel:

- Assume 12 hours of sunlight (43200 seconds)
- Assume solar panel produces common average of 2kW per day

$E = Pt$

$2000 = P \times 43200$

$P = \frac{2000}{43200} = 0.04629J$

- Assume current is 3mA

$P = IV \qquad V = \frac{P}{I}$

$V = \frac{0.04629}{0.003}$

$V = 15.4V$

Fully charged battery

Turbine: over than 90% efficiency

- Assume 'I' is 3mA
- Assume Energy production is 24 hours, 86400 seconds
- Assume average harbour waterflow of 2 knots, 1m/s
- Assume turbine produces 5kW per day average

$P = \frac{E}{T} \qquad P = \frac{5000}{86400}$

$P = 0.0578703J$

$V = \frac{P}{I}$

$V = \frac{0.0578703}{0.003}$

$V = 19.3\ V$

Fully charged battery

[redacted]

Hand-drawn sketches

Side view

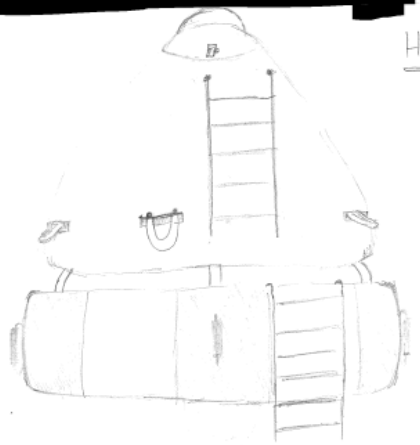

Base view

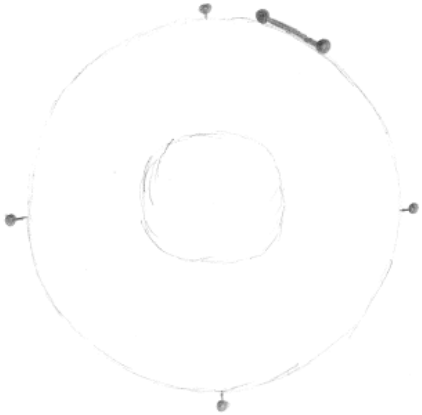

Initial Idea: 1

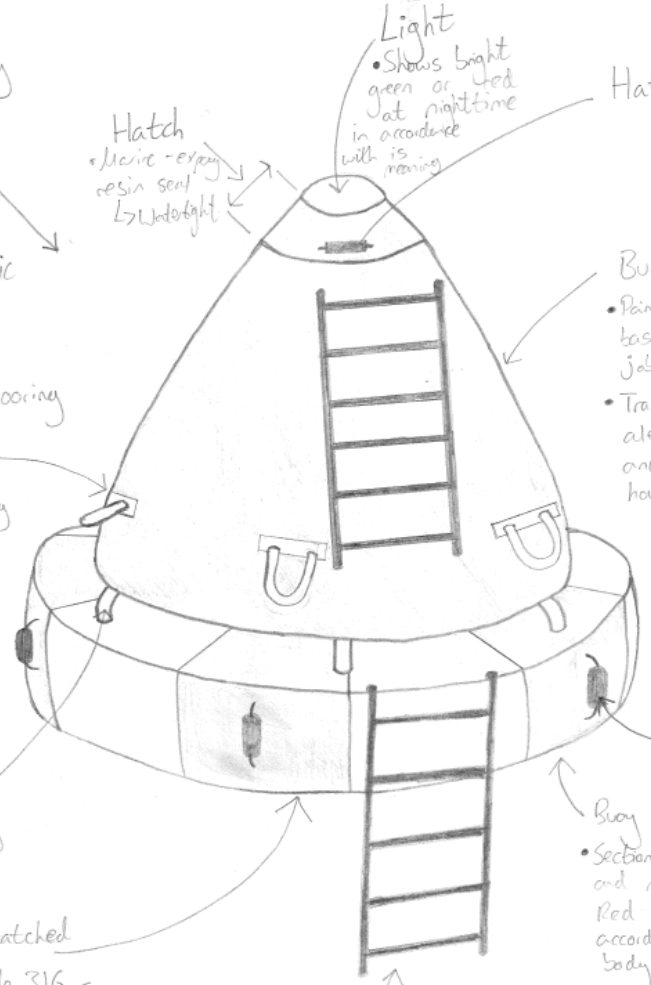

[redacted]

Initial Idea: 1

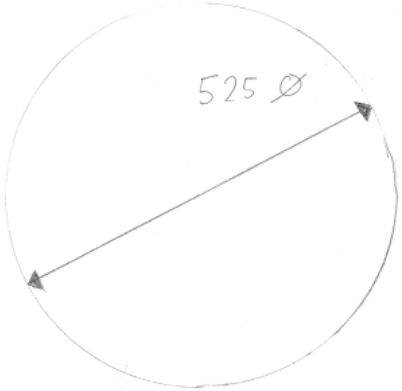

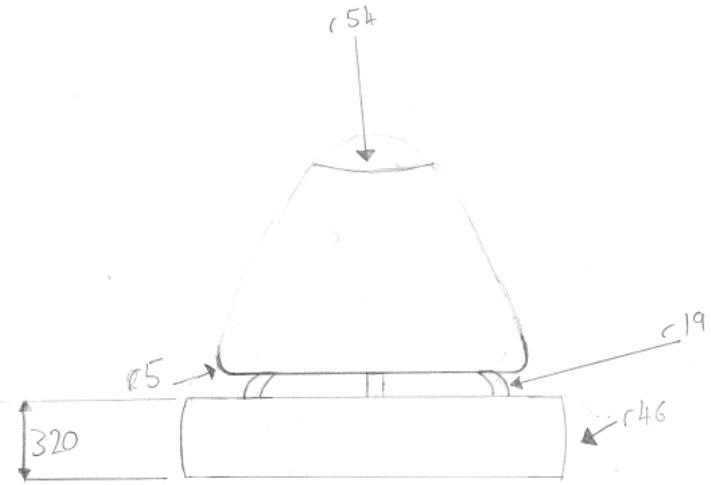

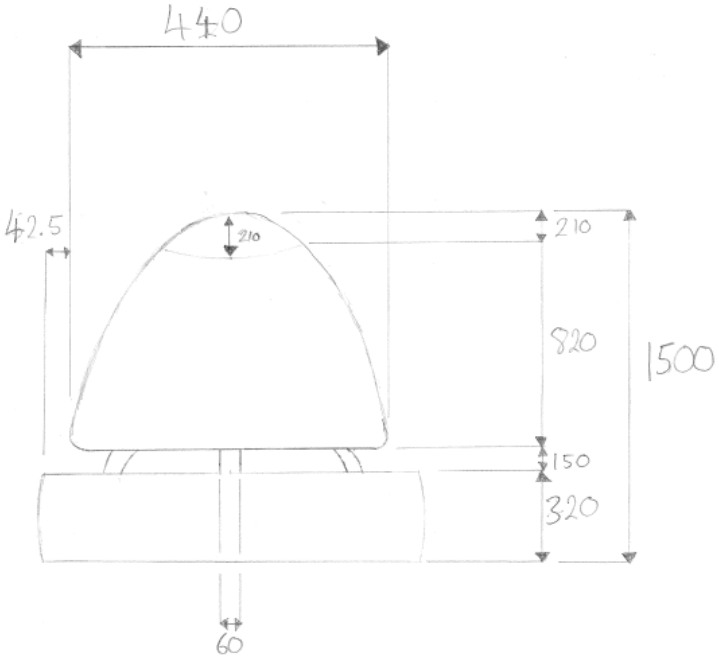

[redacted]

Hand-drawn Sketches

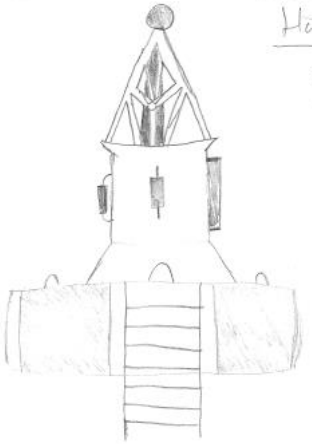

Side view

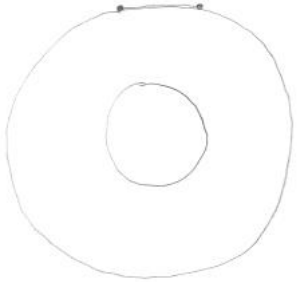

Base view

Initial idea 2

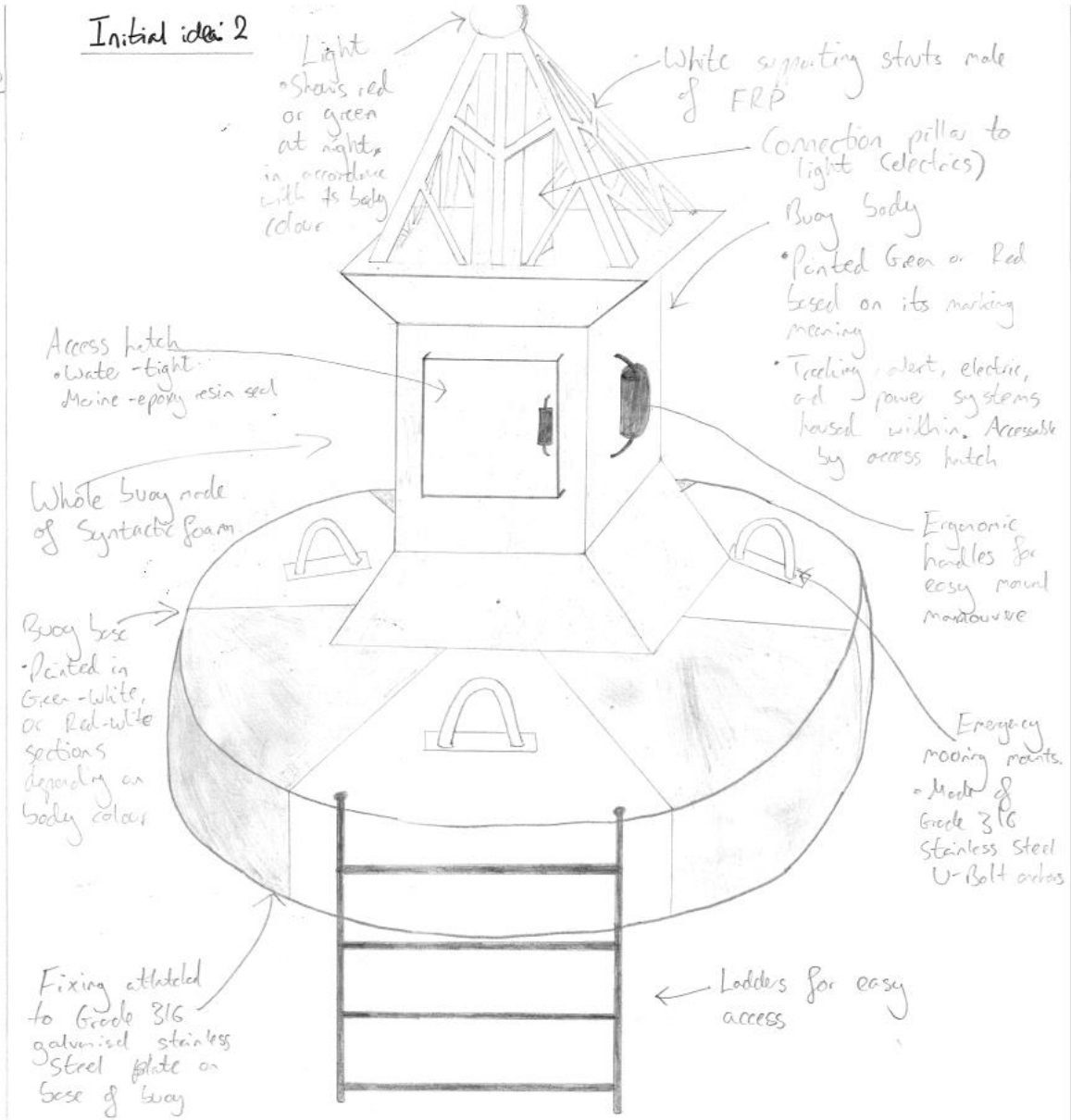

[redacted]

Initial idea : 2

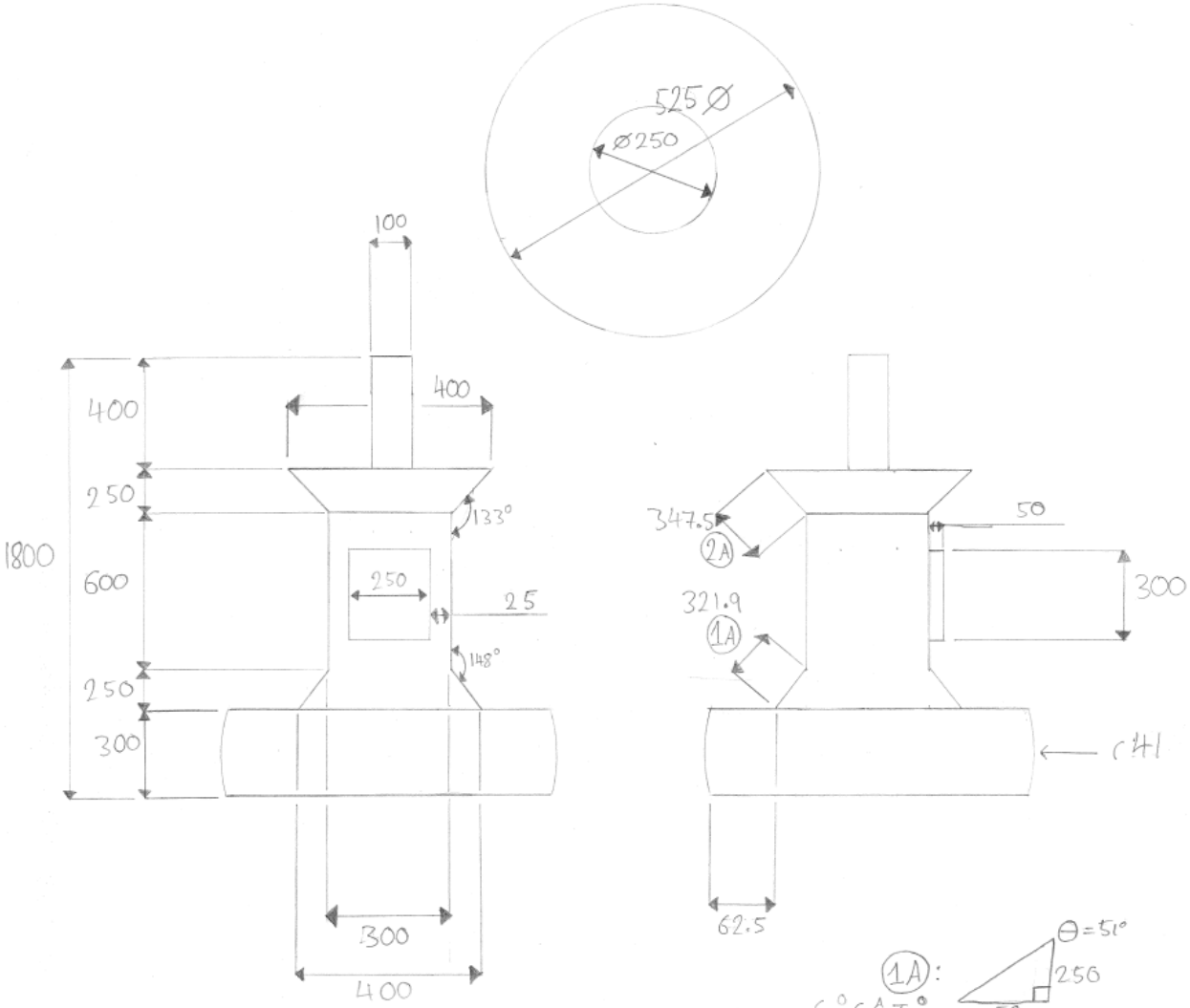

2A:

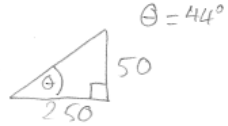

$H = \frac{250}{\cos(44)}$

$H = 347.5$

1A:

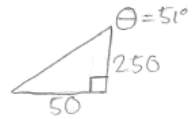

SOHCAHTOA

$H = \frac{250}{\sin(51)}$ $H = 321.9$

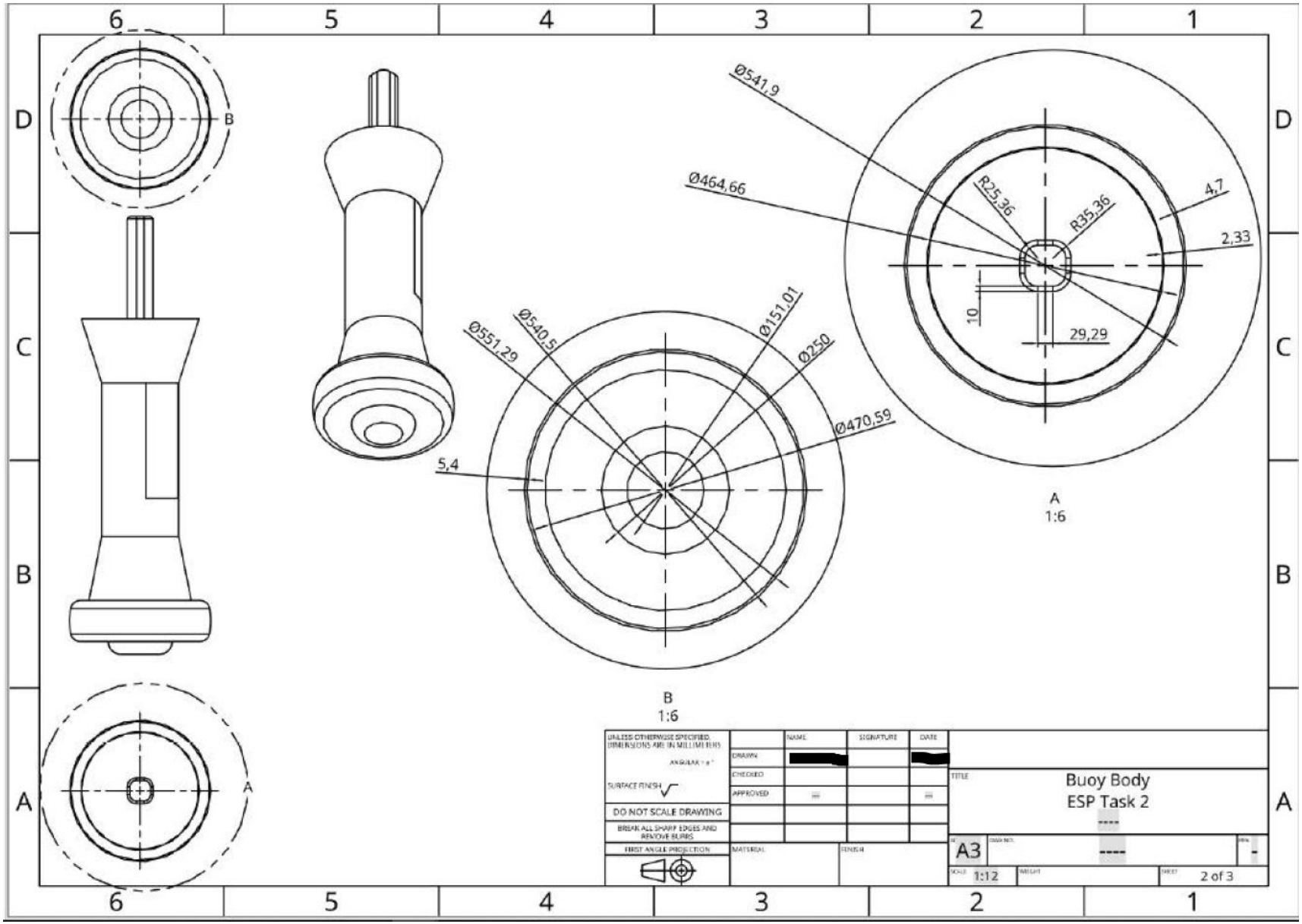
Ø541,9
Ø464,66
R25,36
R35,36
4,7
2,33
10
29,29
A
1:6
Ø551,29
Ø540,5
Ø151,01
Ø250
Ø470,59
5,4
B
1:6
UNLESS OTHERWISE SPECIFIED, DIMENSIONS ARE IN MILLIMETRES
ANGULAR ± 0°
SURFACE FINISH √
DO NOT SCALE DRAWING
BREAK ALL SHARP EDGES AND REMOVE BURRS
FIRST ANGLE PROJECTION
NAME
SIGNATURE
DATE
DRAWN
CHECKED
APPROVED
MATERIAL
FINISH
TITLE
Buoy Body
ESP Task 2
A3
1:12
2 of 3

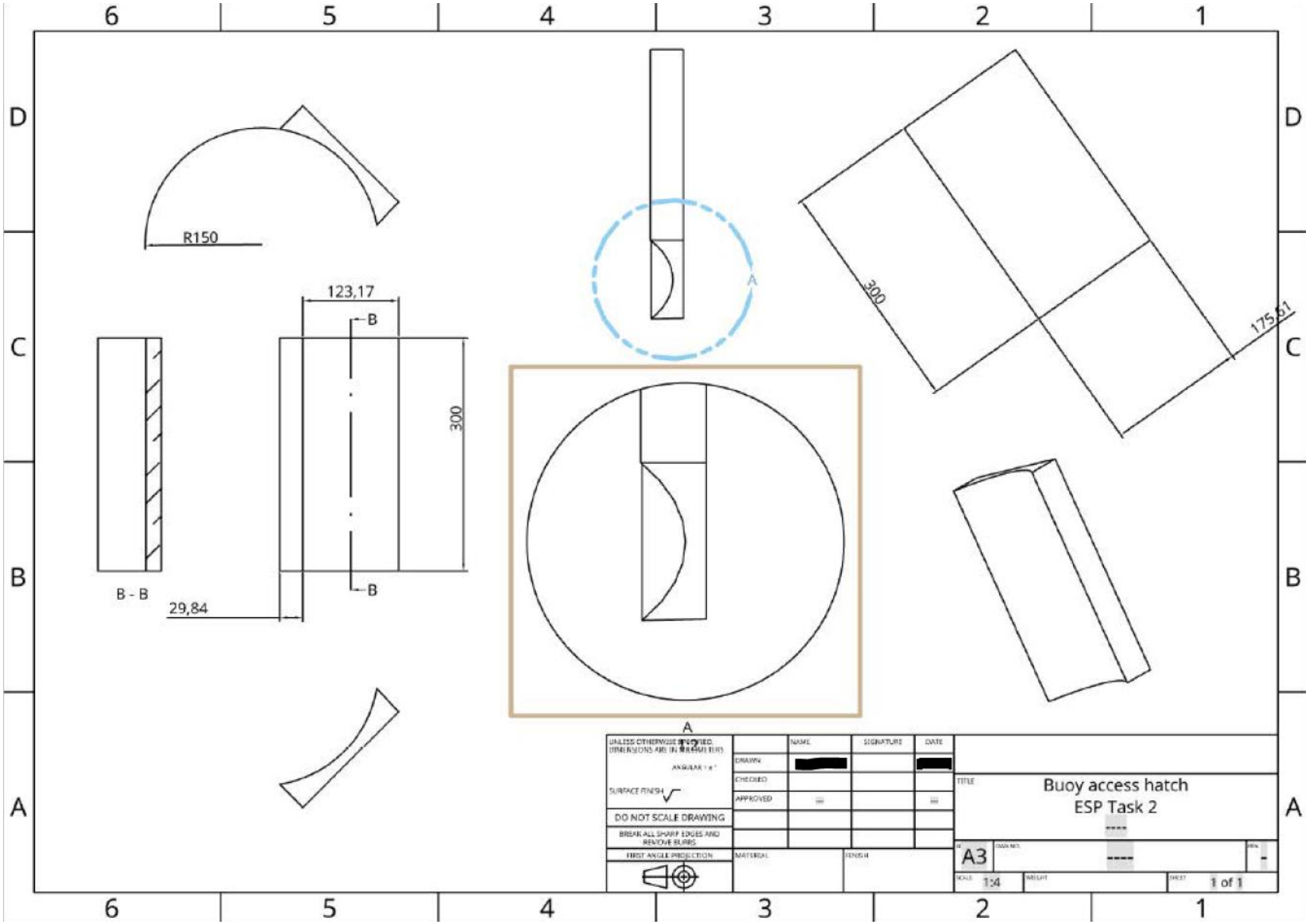
R150
123,17
B
300
B - B
29,84
B
A
300
175,61
A
UNLESS OTHERWISE SPECIFIED DIMENSIONS ARE IN MILLIMETERS
ANGULAR ± 1°
SURFACE FINISH
DO NOT SCALE DRAWING
BREAK ALL SHARP EDGES AND REMOVE BURRS
FIRST ANGLE PROJECTION
NAME
SIGNATURE
DATE
DRAWN
CHECKED
APPROVED
MATERIAL
FINISH
TITLE
Buoy access hatch
ESP Task 2
A3
DWG NO.
SCALE 1:4
WEIGHT
SHEET 1 of 1

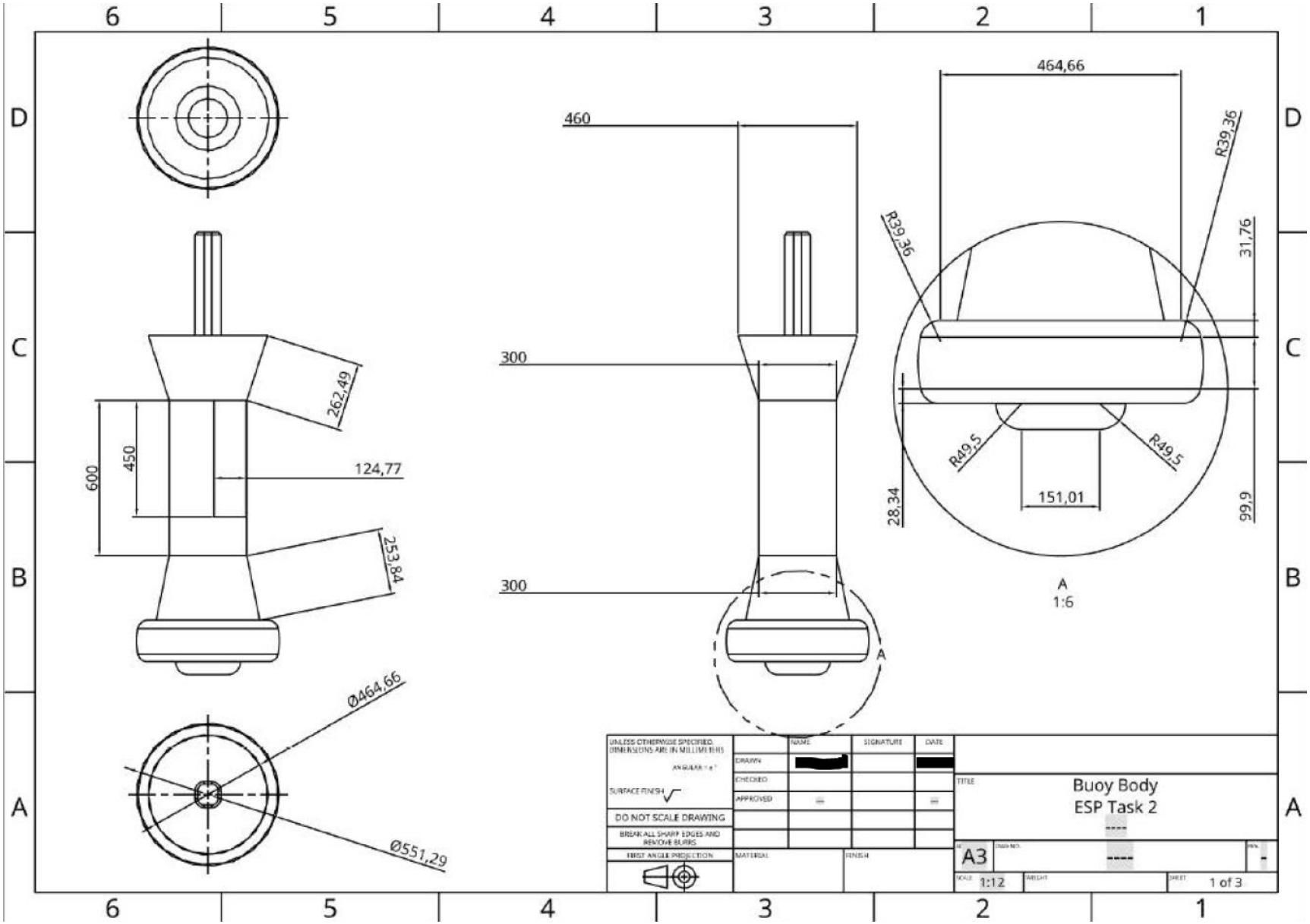
464,66
460
R39,36
R39,36
31,76
300
262,49
450
600
124,77
R49,5
R49,5
151,01
28,34
99,9
253,84
300
A
1:6
A
Ø464,66
Ø551,29
UNLESS OTHERWISE SPECIFIED DIMENSIONS ARE IN MILLIMETRES
SURFACE FINISH
DO NOT SCALE DRAWING
BREAK ALL SHARP EDGES AND REMOVE BURRS
FIRST ANGLE PROJECTION
NAME
SIGNATURE
DATE
DRAWN
CHECKED
APPROVED
MATERIAL
FINISH
TITLE
Buoy Body
ESP Task 2
A3
1:12
1 of 3

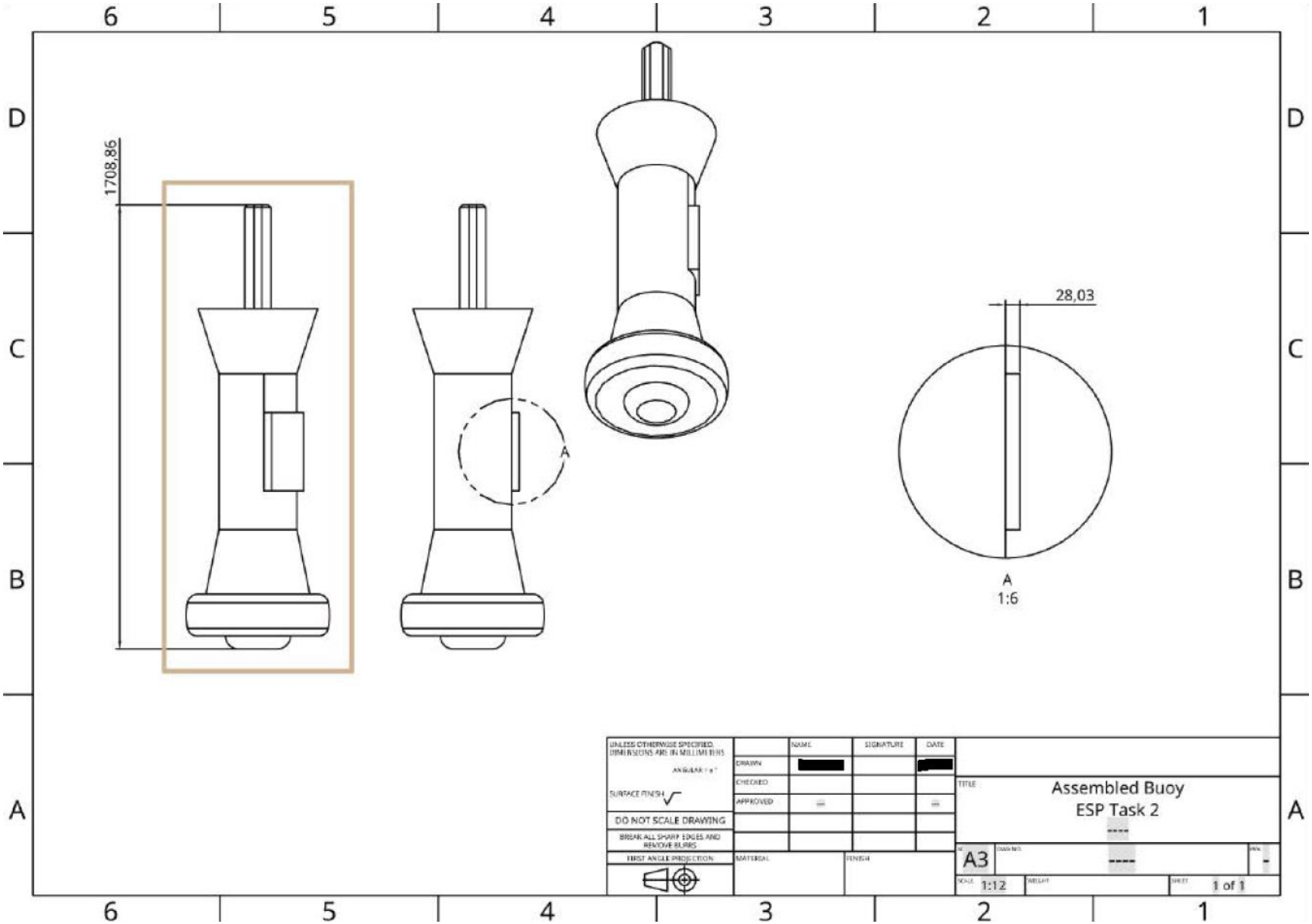
1708,86
A
28,03
A
1:6
UNLESS OTHERWISE SPECIFIED DIMENSIONS ARE IN MILLIMETRES
ANGULAR ± 1°
SURFACE FINISH
DO NOT SCALE DRAWING
BREAK ALL SHARP EDGES AND REMOVE BURRS
FIRST ANGLE PROJECTION
NAME
SIGNATURE
DATE
DRAWN
CHECKED
APPROVED
MATERIAL
FINISH
TITLE
Assembled Buoy
ESP Task 2
A3
1:12
1 of 1

Reflective Notes

Throughout the design process, my initial ideas changed and developed as I completed my final buoy design. I began with two initial ideas, a convex curve buoy (Design 1) and a more rigid - edged buoy (Design 2). The convex curve buoy sat on struts above the buoy base, whilst the whole of the rigid - edged buoy (Initial Design 2) was a whole singular body. Design one was made of Marine HDPE plastic, while design two was made entirely of syntactic foam. However they both had the same ergonomic features, galvanised fixing plate, access hatch and internal housing area as one other.

Culminating together in my final design, I chose to merge the two design ideas together. The main body would have more similarities and dimensions of design 2, but chamfers and fillets gave it the curvature of design one; as well as improving the meeting of the brief requirement of aesthetics. I chose to develop upon my ideas, and create a two - material buoy; consisting of both design materials, Marine HDPE plastic, and syntactic foam. Th e final buoy will be made of a syntactic foam core and a Marine HDPE plastic outer shell. This meets the requirements of the brief's material specification of materials that will not easily rust or corrode, as well as being strong enough to withstand minor impacts.
The final design meets the brief requirements, as the final buoy design stands at 1708.86 mm height, has a base diameter of 525 mm (25 mm tolerance), includes aesthetic features such as the HDPE plastics finish, and the filleted and chamfered ed ges, and emergency U - bolt mooring points, and has ergonomic features such as grip handles and a ladder for easy access.

The final design further meets the brief requirements as it has a planned layout and sufficient internal housing unit for all the elect ric systems, tracking system - which will consist of a GPS within the buoy, powered by the battery - , and alert system - a doppler transponder housed within the buoy which alerts a remote station if it drifts outside of its designated maximum movement zone - ; including a water - tight seal access hatch on the buoy. It is very visible as it will be painted in a Marine - marking green or red paint in accordance with its marking role in the shipping lanes, and it will also have an LDR activated night light that shows red or green depending on its paint colour. The final design also has a renewable power source in the form of a connected hydro - turbine on the underside of the buoy. This will produce an average of 19.3 V per day, meaning that the 12 V rechargeable battery will always be charged as the turbine produces energy all day due to minimum water flow of 2 knots, 1.5 metres per second. The brief also requires the buoy to use standard fixings, so the final buoy design will use a Manta-Ray anchor locked into the seabed, connected to the buoy via a galvanised stainless steel U- bolt anchor located on the galvanised grade 316 stainless steel ballast plate on the underside of the buoy.

Therefore i have chosen this to be final buoy design as it meets all the requirements and specifications of the brief.

Task 3 Plan

Assessment number (eg 1234-033)	8730-035
Assessment title	Employer-Set Project

Candidate name	<first name> <surname>
City & Guilds candidate No.	ABC1234

Provider name	<provider name>
City & Guilds provider No.	999999a

Task(s)	3
Evidence title / description	**Evidence expected for marking:** **Part A** Programme of work (two sides of A4) **Part B** Supporting Statement (typically 1000 words) **Evidence submitted for marking:** **Part A** Programme of work (two sides of A4) **Part B** Supporting Statement (typically 1000 words)
Date submitted by candidate	DD/MM/YY

ESP Task 3, Plan

Programme of work

This project can be split into three key stages, sourcing of materials, manufacturing, and installation. The sourcing of the materials will include finding, purchasing, and awaiting the delivery. Manufacturing will consist of producing the products (100 Buoys), finishing (Galvanising, Painting, Sealing), inspection, and assembly. Lastly the installation stage will be made up of installing the electric circuit, tracking and alert systems, light, and installing the renewable power source; finally then moving the finished buoy into place in its specified environment and area.

Sourcing of materials:

Key stages:

Researching and identifying the appropriate and necessary materials, systems and finishes for the production of the both, and to meet the requirements of the brief specification. This requires product and market research; product research , identifying desired attributes and properties of decided materials, systems and finishes in respect with the briefs requirements; and finalising which grades of decided materials to use for the buoys. Market research, identifying what amounts of materials, systems and finishes need to be bought in order for the production of the buoys and what material companies are reliable, have the material, system, or finish in excess or the availability of it, and are certified. Product and market research will require necessary technology in the form of computers to be able to carry out this stage, and will cost nothing to complete.

Purchasing will include contacting companies and distributors to either begin sales talks, or be provided with a quote by said company or distributor. Once settled on a source and price, purchasing the materials, systems and finishes will then proceed. This stage will require computers and phones, and take an approximate amount of £32,800 out of the budget.

Delivery of the materials will then take place. This will require a designa ted area or warehouse to store the purchased material, requiring equipment such as forklifts. The delivery of materials must be considered as a cost as we can assume there will be a fast delivery premium of approximately £200.

Manufacturing:

Key stages:

Manufacturing of the buoys will consist of identifying the necessary process required for the buoys, in this case blow - moulding for the HDPE plastic, presswork for the stainless steel and mould - cavity forming for the syntactic foam, and then finding sui table companies and manufacturers available to manufacture them. The processes will require manufacturing equipment of the companies such as manufacturing dies and moulds and PPE. This should take approximately £40,000 out of the budget for contracting and manufacturing, assuming that the companies will already have the necessary manufacturing equipment and provide PPE themselves.

Finishing of the buoys will require processes of galvanising, painting, and sealing the necessary parts. All parts must be galv anised fully, which will require tree - coat galvanisation, the buoy body and sectioned base must be painted (50 red and 50 green, assume one of each per week), and finally the access hatch must have its initial seal applied. Although all the materials for t hese stages were included in the initial material budget, we must assume that there will be a labour and PPE cost of approximately £10,000.

Inspection of the buoys must take place before and after final assembly. Each part must be tested and inspected for its required properties, such as weight, strength, dimensions, water - tightness and many others. This also enables any 'prototype faults' to be identified and corrected. The inspection process will require the necessary inspection and testing equipment, as well as employee costs of approximately £35,000.

Assembly of the buoy will be carried out after initial inspections are completed. All parts will be put together and then final inspection and testing will be carried out on each assembled buoy to ensure i t meets the requirements of the brief and will operate how it should. The assembly will require a labour cost of approximately £25,000.

Installation:

Key stages:

Electric, alert and tracking systems will be installed post assembly. They will all be placed inside the internal housing unit within the buoy that has an already planned layout. This installation process will cost approximately £15,000.

Renewable power source installation will conclude the assembly of the finished buoy. The power source in the form of an underwater hydro - turbine will be connected to the underside of the buoy, and then in turn connected to the generator within the internal housing unit within the buoy body. This installation expenditure will be approximately £15,000, with the turbine cost already included in the materials, systems, and finishing cost.

Final installation of the buoys in the harbour will require the transport of the finished buoys to the harbour, transport of each buoy to its mooring place via a boat, installation and labour of the manta - ray anchor fixing to the floor bed, and labour to install the buoy and attach it to its mooring point. 4 trucks will be required to transport the buoys to the harbour, assuming that each truck can hold 25 buoys, boats at the harbour will be required to take the buoys (few at a time) to their mooring points, and manual worker s and divers will be required to install the fixing and the buoy to the fixing. This all complies together to cost approximately £25,000.

Summary:

Once all these stages are completed, all buoys will be in place in the shipping lanes, fixed to their moori ng point. All brief requirements will have been met, tested, and inspected. The total approximate expenditure across all three key stages equates to £198,000, £2,000 under the specified budget of Harbour Shipping LTD. This works out to be £1,980 per buoy (£198,000/100), which fits the brief's requirements of £2000 per buoy, as each buoy is £20 than the specified limit.

ESP Task 3, Plan

Critical Path and Gantt Chart list

A - Material sourcing and purchasing, duration: 1 week
B - Manufacturing of buoy body, duration: 50 weeks
C - Manufacturing of buoy base, duration: 50 weeks
(B and C done simultaneously)
D - Inspection of all manufactured and purchased parts, and systems, duration: 50 (can be done whilst B and C are in progress)
E - Assembly of all full buoys and finishing processes, duration: 4 weeks
F - Final inspections of all fully assembled buoys, duration: 2 weeks
G - Transport of buoys to harbour, duration: 2 weeks
H - Fixings applied into seabed, duration: 1 week
I - Buoy attached to fixing, duration: 2 weeks, however have 10 weeks to finish.

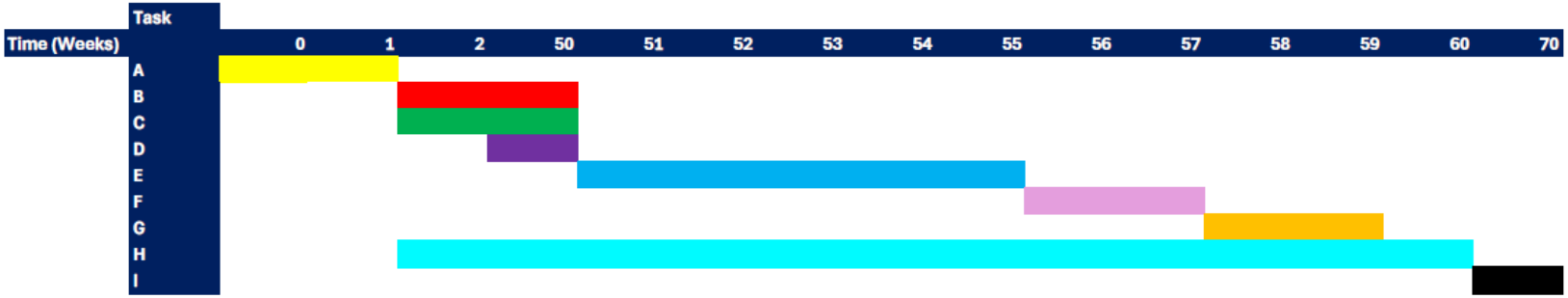
Task
Time (Weeks)
0
1
2
50
51
52
53
54
55
56
57
58
59
60
70
A
B
C
D
E
F
G
H
I

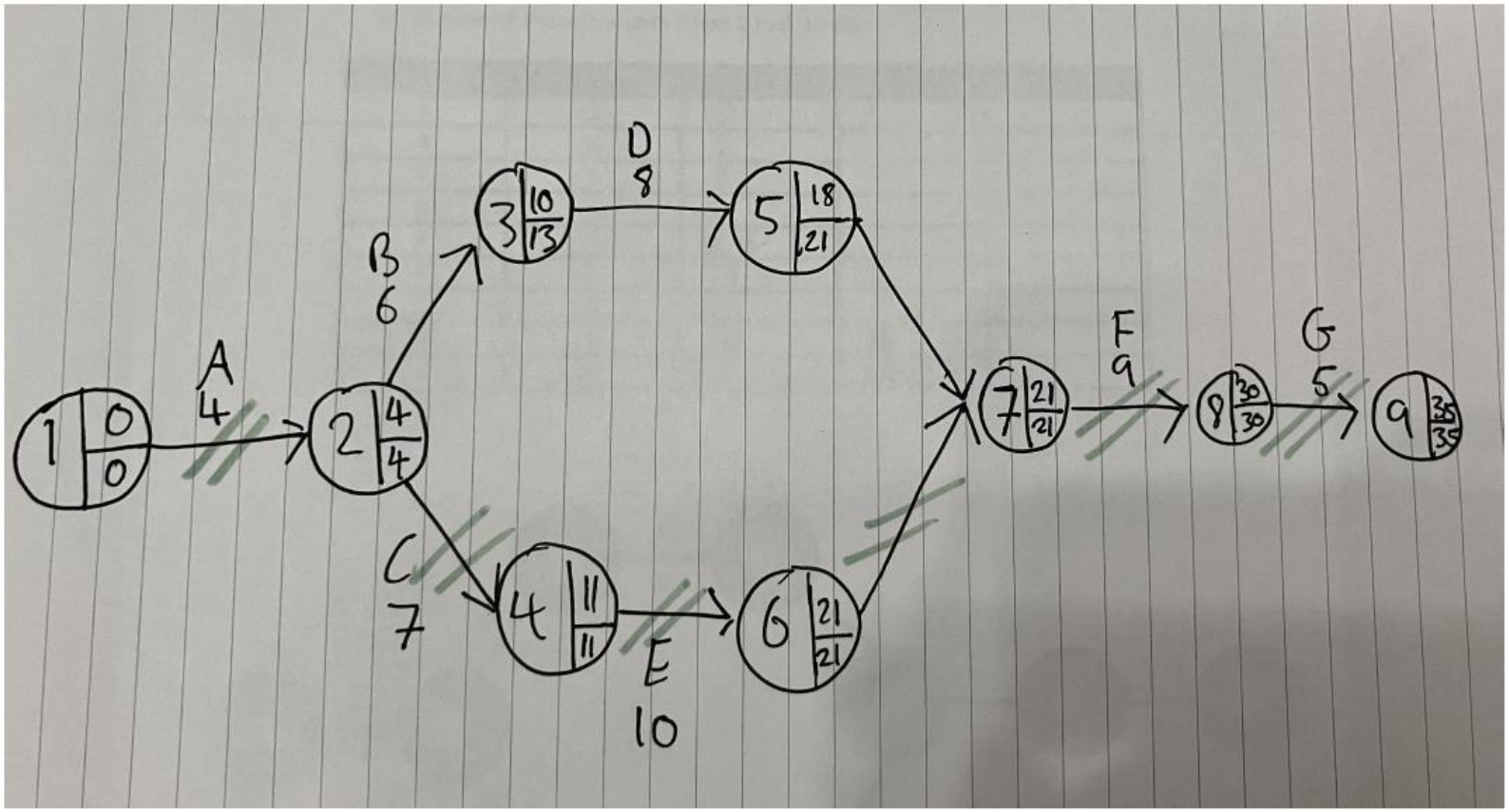
1 0 0
A 4
2 4 4
B 6
C 7
3 10 13
D 8
4 11 11
E 10
5 18 21
6 21 21
7 21 21
F 9
8 30 30
G 5
9 35 35

ESP Task 3, Plan

Supporting statement

I have chosen this programme and plan of work in order to create the most critical, efficient, and effective production outcome possible for both the brief's requirements and the manufacturing of the buoys.

Sourcing, researching and purchasing the buoys is a simple task, but is necessary and must be completed first. Therefore the first stage of the production process must be this key stage.

Secondly, the manufacturing and inspection. This is key, and must come second, as before the buoys can be implemented into the harbour; they must first be made and then tested in order to assure their operability, safety and that they meet the requirements of the brief. Thus I have put this stage second in the programme of work plan.

Lastly, the implementation stage. This must come last, after Harbour Shipping Limited have not only been assured of their product quality, safety, and operability; but also that the manufactured product meets all the set requirements and specifications listed in the brief.

Health and safety is of utmost importance, and applies to each and every part of the manufacturing and implementation stages and processes. Firstly, HASAWA (Health And Safety At Work Act) 1974, applies to the whole buoy production process. It must be ensured that employees and anyone else near or within the process is protected and safe whilst it is commencing. Then MHSWR (Management of Health and Safety at Work Regulations) 1999, means we must follow and ensure the set guidelines for managing safety at work, how it is documented and displayed, and what control measures are in place in the hierarchy of controls in the workplace.

PUWER (Provision and Use of Work Equipment Regulations) 1998 is critical to the manufacturing process involving equipment such as machinery, testing and inspection equipment, and any other equipment used within the production and installation process. It will ensure that machines and equipment will be only used by trained employees, have clear emergency instructions and kill switches, be regularly aligned, inspected, cleaned, and have exempt upkeep, as well as implementing a 'Lock Out, Tag Out' precaution too.

PPER (Personal Protective Equipment Regulations) 1992 must be followed. This means that all employees will be provided with the necessary PPE for their task, their equipment being used, and role. For instance, an employee who is finishing a product -eg. manual deburring and lathing- will be provided with eye protection or ventilated visor, required work boots, and heat proof gloves and apron. This will protect that worker from heat burns and possible wounds and injuries caused by the hot product, or hot and sharp swarf that comes off the product as it is finished.

Penultimately, the safety legislation COSHH (Control Of Substances Hazardous To Health) 1989, will come into place. This will encompass both the manufacturing and finishing process, as during both, substances hazardous to health will be present; whether in the form of fumes, materials, liquids, etc.... Reviewing this within a Risk Assessment process will then outline the needed PPE and control measures required for each process, for instance, the zinc galvanising process may require gloves, eye protection, and a ventilated mask to be provided.

Lastly, MHOR (Manual Handling Operations Regulations) 2002 will be required when moving materials and parts around, lifting finished products, and any other manual handling required within the manufacturing and installation stages. Equipment such as pallet jacks, forklifts, and mechanical aids will be provided to ensure worker safety during required manual handling.

A risk assessment (RA) must be done for each and every stage of the manufacturing and installation process. This will consist of Hazard identification (HAZID) being completed first, identifying and outlining the hazards present. Hazard and operability study (HAZOP), which will look further at the hazard and

how it may affect the process. Then an evaluation of risks will take place, where the severity of the risk, how many people would be affected, and the likelihood of the risk happening are reviewed. Implementation of control measures will then be put in place with a designed hierarchy of controls. Recording the found risks and hazards will then be done, and finally reviewing and revising the completed risk assessment will take place and then in turn be documented and filed.

All risk assessments will be done before any stage of the programme of work is started, and throughout the entire plan of work process, both the RA and all health and safety requirements, regulations and legislation will be constantly considered and kept too.

Quality control is a prominent and important part of the manufacturing process. For the final production of the buoys, they must meet or surpass the required specification set by the brief; there is no tolerance for anything below. Therefore inspection and testing will be consistently carried out throughout the stages. 100% sampling will be carried out, each and every buoy will be thoroughly inspected and tested to make sure it meets the requirements and has the expected properties and dimensions before it is classed as finished and ready for installation. Quality assurance (QA) will follow the standards set by ISO 9000, 2015, to ensure that the quality management process is focused on providing assurance that all quality requirements will be met, This will entail testing and inspection of all parts both bought and manufactured, and documenting all the parts and their inspection and testing results to provide full information of the product and to provide traceability.

Quality control (QC) is a part of the quality management process to fulfil the quality requirements, and is also clearly set out within ISO 9000, 2015. The quality control requires inspection and testing of any raw materials upon arrival, inspection and testing of parts at various stages of manufacturing and assembly, and the inspection and sampling of all final buoys.The quality standard ISO 9001 must also be followed to ensure that the buoy also meets the internationally recognised quality standards set in place.

Key stages for manufacturing the buoy must be followed in a set process and order. All raw materials and purchased parts must first be inspected for quality, then raw material will be machined, worked, and finished, as well as being tested and inspected at stages throughout their process. They must be then assembled into the final product, inspected, and then finished by means of galvaising, painting, deburring, etc… They must then have a final, rigorous inspection and testing to ensure that all the buoys meet the quality standards set, brief requirements, and environment conditions they will be in.

Waste management will utilise the 'TIMWOODS' acronym for types of waste, and thus followed to ensure the least amount of waste during the whole process. **T**ransport of the materials and parts, will be done all together as to waste the least time and expenditure on delivery. **I**nventory, no material will be unused, all materials when purchased will be purchased in the amount of having little to no spare inventory once the buoys have been made. **M**otion, the wear and tear of employees and equipment must be considered and measures implemented, such as breaks throughout employees shifts, and maintenance done to the machines and equipment. **W**aiting, once finished, the product will not just sit there, it will be tested and inspected, any rework needed will be done, and as other parts become available, it will be assembled and finished into the final buoy. **O**verproduction, the correct amount of parts will be bought, and buoys will be manufactured. **O**verprocessing, the buoys and parts will have what is necessary to be done, they will not be overprocessed or overworked. **D**efects will be found if there are any, and then they will be reworked or redone if it is necessary. **S**kills, people's skills, talents and interests will not be overlooked; the correct, skilled employees for each process will take part, and not be wasted.

Environmental factors must also be considered. The emissions for transporting and delivering product and materials will be combated by transporting all materials or products together; thus reducing the amount of emissions from these stages. Any waste, swarf, or equipment that must be disposed of through the manufacturing and finishing process will not just be put in a bin, they will be disposed of the correct way; whether it is taking certain things to a government designated disposal facility, or paying a specific government approved disposal company to come and remove the waste item/s from our possession. As the

buoys are being installed in water, water and ocean pollution must also be considered; the buoys will have been tested and inspected in order to ensure that no chemical, material, or liquid pollution will harm the ocean and its environment.

Assumptions:

Any assumptions made within the task 3 programme of work, or supporting statement are listed below:

- Contracted companies will have PPE necessary and required equipment and machinery available
- Contracted companies will be ISO approved
- All purchased parts and materials will be able to be delivered together as one large shipment
- All specified stages within the programme of work and critical path will take the specified duration
- All workers are paid around £10/h
- There are no delays, and if there is it ends within the available float time
- All employees are fully skilled
- All machines and equipment are well maintained, up to date, and re-aligned.
- All regulations and legislations aligning to the project stay the same and are not altered or changed.
- The materials delivered and used are perfect for manufacturing and production with no faults, defects or issues present when inspected and tested at the beginning and end of manufacturing
- There are no issues between the on-shore station that receives the alert from the buoy and tracks it via GPS
- All electrical and powered components within the buoy are correctly assembled and work
- The access hatch seal, and buoy itself remains watertight
- The Manta-Ray anchor is able to be connected to the U-bolt fixing on the underside of the buoy.
- All materials, contracts, and process required keep in line with current approximate prices

Task 4 Present

Assessment number (eg 1234-033)	8730-035
Assessment title	Employer-Set Project

Candidate name	<first name> <surname>
City & Guilds candidate No.	ABC1234

Provider name	<provider name>
City & Guilds provider No.	999999a

Task(s)	4
Evidence title / description	**Evidence expected for marking:** Presentation materials **Evidence submitted for marking:** Presentation materials
Date submitted by candidate	DD/MM/YY

What is the project?

- Aims to produce 100 bespoke buoys to mark shipping lanes
- Contain a renewable power source
- Have an alert and tracking system within the buoys
- Will be durable and resistant to its environment

Final design

Key features:

- Constructed of a Marine –grade HDPE plastic shell, with a Syntactic foam core within
- LDR activated light atop the buoy
- Marine-grade and standard paint finish
- Grade-316 stainless steel ballast plate on the underside of buoy
- Standard fixings consisting of a U-bolt anchor connected to a Mantaray anchor in the seabed
- Internal housing unit accessible by a watertight,epoxy resin sealed hatch
- Emergency mooring mounts around buoy

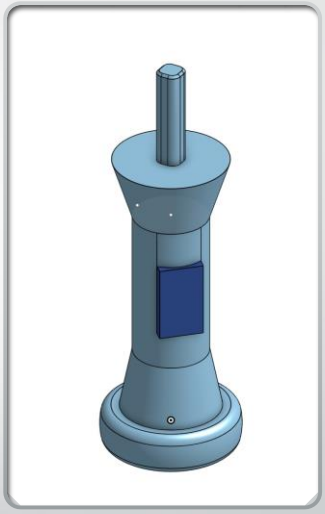

Alert and Tracking system

- Alert system will consist of a doppler transponder housed within the buoy
- Will have a programmed maximum range of movement
- If it strays further, the alert system will activate and alert a remote on-shore station

- Tracking system will be made up of a GPS tracker within the internal housing unit
- Powered 24/7 for constant tracking ability

Buoy durability

- Combination of 2 materials, a HDPE plastic shell and a Syntactic foam core

HDPE plastic:
- ✓ Resistant to marine conditions
- ✓ High impact and tensile strength
- ✓ Resistant to stress cracks, rust, and corrosion
- ✓ Aesthetic, textured surface

Syntactic foam:
- ✓ Provides buoyancy and weight reduction
- ✓ Exceptional strength
- ✓ Resistant to moisture, water, and chemicals
- ✓ Acts as an insulator, optimal for housing electric devices

- ✓ Buoyant
- ✓ Resistant to marine conditions, rust, and corrosion
- ✓ Impact and tensile strength
- ✓ Aesthetic finish
- ✓ Insulating properties

Buoy fixings

- 2 fixings used
- U-bolt anchor, connected to steel plate on the underside of the buoy
- Manta-ray anchor, placed into the seabed and secured
- The manta-ray anchor shaft will then be connected to the u-bolt anchor

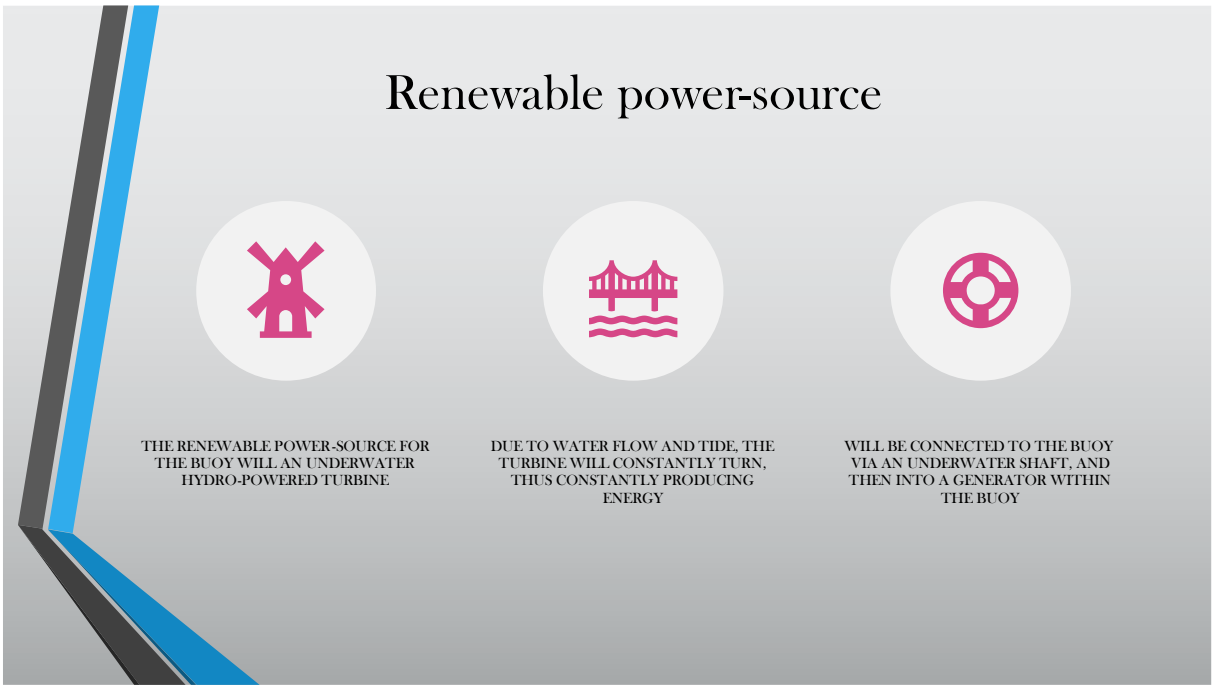
Renewable power-source
THE RENEWABLE POWER-SOURCE FOR THE BUOY WILL AN UNDERWATER HYDRO-POWERED TURBINE
DUE TO WATER FLOW AND TIDE, THE TURBINE WILL CONSTANTLY TURN, THUS CONSTANTLY PRODUCING ENERGY
WILL BE CONNECTED TO THE BUOY VIA AN UNDERWATER SHAFT, AND THEN INTO A GENERATOR WITHIN THE BUOY

Manufacturing Plan
HDPE plastic is to be blow-moulded into shape
Syntactic foam will be formed by using a mould-cavity process
All parts once manufactured are fully assembled and finished
Quality assurance and control throughout the entire manufacturing process
All health and safety legislations considered and acted upon, with risk assessments before production
Quality standards to be followed and assured

Installation

- Finished buoys will be transported to the harbor
- From there, they will be taken out to sea via boat
- Selected fixings will be pre-installed
- The buoy will simply be attached to the fixing

Cost

- Project budget of £200,000
- £2,000 per buoy
- Total expenditure of £198,000, £1980 per buoy
- Best quality materials from cheaper sources
- Contracting work for manufacturing rather than the purchase of machinery and equipment
- As little waste costs as possible

Challenges presented

Challenges I found I was presented with included:

- The design of the buoy
- The alert and tracking system
- Aesthetic features
- Manufacturing processes

How these were overcome

1. I tailored my design to be able to fit within the dimension constraints
2. Researching and finding the most efficient, lightweight, and cost-effective options
3. Tailoring design to contain aesthetic features within dimensions and operability
4. Researching the best processing and manufacturing options

Why is this buoy the best option?

1. The buoy meets all requirements of the client's brief, and has been carefully chosen in accordance
2. The material choice is more than appropriate for the buoys purpose and environment, with many desirable properties
3. Its housing unit is easily accessible, and removal for maintenance of the buoy is simple
4. It maintains the perfect balance of quality, time constraints, and budget

How have we met the specification and addressed the brief?

- Meets the requirements and specification very well
- Utalises and delivers all aspects of the specification
- Stays within the project budget
- Will be completed within the given time frame of 70 weeks

- However
- The tracking and alert system could be revised
- Cheaper costing materials with similar properties may be available
- Buoy design, dimensions, and aesthetic features could be improved

Employer-Set Project – Presentation Q & A Record (Task 4)

8730-14 T Level Technical Qualification in Design & Development for Engineering and Manufacturing

8730-035 Employer-Set Project (Summer 2024)

Candidate name	<first name> <surname>
City & Guilds candidate No.	ABC1234
Date	DD/MM/YY

Provider name	<provider name>
City & Guilds Provider No.	999999a

Record observation notes below to inform external marking. **Notes must be detailed, accurate and differentiating.**

Tutor questions to candidate	Candidate responses
Challenging	Tracking System
Buoy Power	Underwater turbine
Sustainability	Sustainable plastic used

Any other comments

Tutor signature	Date
X _____	DD/MM/YY

If completing electronically, double click next to the ‘X’ to add an electronic signature once the record is **finalised**.

Get in touch

The City & Guilds Quality team are here to answer any queries you may have regarding your T Level Technical Qualification delivery.

Should you require assistance, please contact us using the details below:

Monday - Friday | 08:30 - 17:00 GMT

T: 0300 303 53 52

E: **technicals.quality@cityandguilds.com**

W: **http://www.cityandguilds.com/tlevels**

Web chat available **here**.

The T Level is a qualification approved and managed by the Institute for Apprenticeships and Technical Education.

Copyright in this document belongs to, and is used under licence from, the Institute for Apprenticeships and Technical Education, © 2024. 'T-LEVELS' is a registered trademark of the Department for Education. 'T Level' is a registered trademark of the Institute for Apprenticeships and Technical Education. 'Institute for Apprenticeships & Technical Education' and logo are registered trademarks of the Institute for Apprenticeships and Technical Education.

Every effort has been made to ensure that the information contained in this publication is true and correct at time of publication. However, City & Guilds products and services are subject to continuous development and improvement, and the right is reserved to change products and services from time to time. City & Guilds cannot accept responsibility for any loss or damage arising from the use of information in this publication.

City & Guilds is a trademark of City & Guilds Limited, a company registered in England and Wales (company number 16513878). City and Guilds Group, Giltspur House, 5–6 Giltspur Street, London EC1A 9DE