T Level Technical Qualification in Design and Development for Engineering and Manufacturing (8730-14)

8730-035 Employer-Set Project Exemplar – E Grade

Summer 2024

Contents

Introduction **2**

Task 1 Research **5**

Task 2 Design **11**

Task 3 Plan **14**

Task 4 Present **17**

Introduction

Summer 2024 Results

This document is aimed at providers and learners to help understand the standard that was required in the summer 2024 assessment series to achieve an E grade for the 8730-035 Design and Development for Engineering and Manufacturing Employer-Set Project (ESP).

Providers and learners may wish to use it to benchmark the performance in formative assessment against this to help understand a potential grade that may be achieved if a learner was to attempt the next summative assessment series.

The Employer-Set Project is graded A* to E and Unclassified.

The exemplar evidence provided for the E grade displays the holistic standard required across the tasks to achieve **one mark above** the E grade boundary for the summer 2024 series. A slightly weaker performance would have resulted in an Unclassified (U) result being issued.

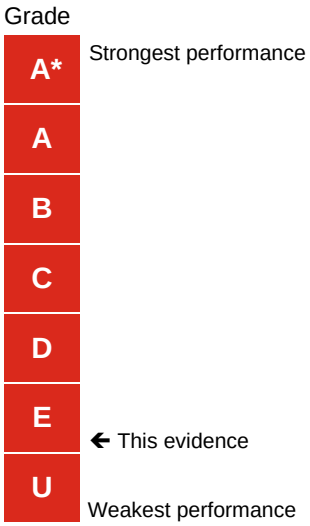

The Employer-Set Project brief and tasks can be downloaded from here.

Important things to note:

- We discussed the approach to standard setting/maintaining with Ofqual and the other awarding organisations before awarding this year. We have agreed to take account of the newness of qualifications in how we award this year to recognise that students and teachers are less familiar with the assessments (grading-arrangements-for-vtqsand-technical-qualifications-within-t-levels-in-the-academic-year-2023-to-2024) whilst also recognising the standards required for these qualifications.

- The exemplar evidence presented, as a whole, was sufficient to achieve the E grade. However, performance across the tasks may vary (i.e. some tasks completed to a higher/lower standard than an E grade).

Marking of this Employer-Set Project is by task and Assessment Objective, below is a summary of these along with the mark achieved by the evidence presented and the maximum mark available for each aspect.

Task	Assessment Objectives	Mark achieved	Max mark available
Task 1 Research	- AO1 Plan their approach to meeting the project brief - AO2a Apply core knowledge - AO3 Select relevant techniques and resources to meet the brief	3	9
	- AO2b Application of core skills	3	6
Task 2 Design	- AO1 Plan their approach to meeting the project brief - AO3 Select relevant techniques and resources to meet the brief	3	6
	- AO2a Apply core knowledge	3	6
	- AO2b Application of core skills	3	6
	- AO5a Realise a project outcome – was the right outcome achieved - AO5b Review how well the outcome meets the brief, how well the brief was met, the quality of the outcome in relation to the brief	2	6
Task 3 Plan	- AO1 Plan their approach to meeting the project brief - AO3 Select relevant techniques and resources to meet the brief	1	6
	- AO2a Apply core knowledge	1	6
	- AO2b Application of core skills	1	6
Task 4 Present	- AO1 Plan their approach to meeting the project brief - AO3 Select relevant techniques and resources to meet the brief	2	6

	- AO2a Apply core knowledge	2	6
	- AO2b Application of core skills	2	6
	- AO5a Realise a project outcome – was the right outcome achieved - AO5b Review how well the outcome meets the brief, how well the brief was met, the quality of the outcome in relation to the brief	1	6
Maths	- AO4a Use of Math skills	2	3
English	- AO4b Use of English skills	1	3
Digital skills	- AO4c Use of digital skills	1	3

What evidence was being assessed for the maths, English and digital skills:

Maths:

- Annotations on sketches (Task 2)
- Dimensioning and scaling CAD drawing (Task 2)
- Electrical power requirements (Task 2)
- Calculation of design and manufacturing cost, timescales and critical path within the Programme of work (Task 3)

English:

- Technical brief (Task 1)
- Notes detailing how the designs meet the brief requirement (Task 2)
- Supporting statement for the programme of work (Task 3)
- Presentation delivery (orally) and materials to support presentation (e.g. slides etc) (Task 4)

Digital:

- Types of sources used for Research (Task 1)
- CAD Drawing (Task 2)
- Presentation of the programme of work (Task 3)
- Presentation materials (slides, handouts, notes etc) (Task 4)

Task 1 Research

Assessment number (eg 1234-033)	8730-035
Assessment title	Employer-Set Project

Candidate name	<first name> <surname>
City & Guilds candidate No.	ABC1234

Provider name	<provider name>
City & Guilds provider No.	999999a

Task(s)	1
Evidence title / description	**Evidence expected for marking:** **Part A** Research notes including a list of references/sources **Part B** Technical brief (typically 1500 words) **Evidence submitted for marking:** **Part A** Research notes including a list of references/sources
Date submitted by candidate	DD/MM/YY

MECHANICAL

The water buoyancy is dependent to the float assembly and the anchor to be able to float and not sink. The float assembly must displace enough water relevant to the buoy size and mass. The buoy must consist of the inner part and the outer part, the outer part must be highly corrosion resistance as it is mostly the part that will be submerged under water and the inner part main function is to protect the electronic mechanism and technologies inside the buoy, If an anchor is fitted the friction or catenary of the chain or warp does the actual holding. To get the maximum hold the anchor must be lowered, 'hand over hand' until it touches the bottom,

https://www.google.com/url?sa=i&url=https%3A%2F%2Fwww.tidelandsignal.com%2Fnavigation-buoys%2F&psig=AOvVaw08c1UgYGCVH3e6UKk03o2j&ust=1709807109569000&source=images&cd=vfe&opi=89978449&ved=0CBEQjRxqFwoTCLjMlYi234QDFQAAAAAdAAAAABAS

If an achor is fitted:

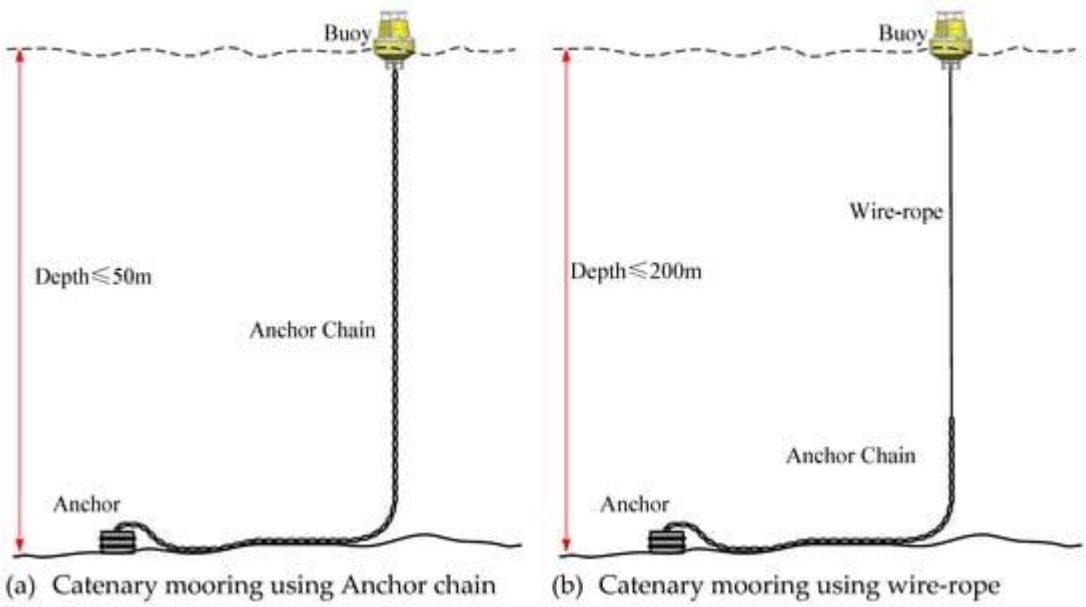

https://www.google.com/url?sa=i&url=https%3A%2F%2Fwww.mdpi.com%2F2077-1312%2F8%2F9%2F672&psig=AOvVaw1bljizz8jEN59ye_tmh9Sv&ust=1709808874758000&source=images&cd=vfe&opi=89978449&ved=0CBEQjRxqFwoTCICXmsu834QDFQAAAAAdAAAAABAD

Furthermore, in my understanding the brief describes that the buoys are to mark lanes to improve visibility of shipping lanes into the harbour. As buoys float on their own in the ocean, it is reasonable that each buoy has its own mechanism and electrical technology to be able to be noticed, kept account of individually and to be controlled. The formula we will use is fba = pvg to find the buoyance density of the whole buoy

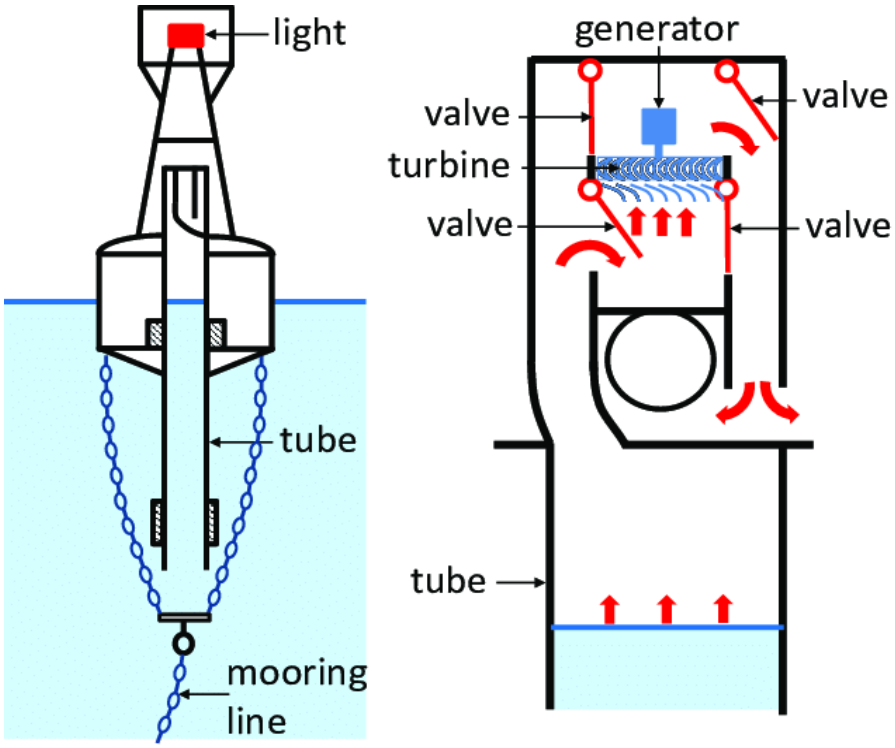

https://www.google.com/url?sa=i&url=https%3A%2F%2Fwww.researchgate.net%2Ffigure%2FLayout-of-Masudas-navigation-buoy-based-on-10-On-the-right-hand-side-details-of_fig1_281307478&psig=AOvVaw3SxDnTm6sc5hqJZRmUdYEU&ust=1709807453875000&source=images&cd=vfe&opi=89978449&ved=0CBEQjRxqFwoTCMje0qG334QDFQAAAAAdAAAAABAD

the above image is a simple water buoy showing the basic structure and mechanism of the water buoy. The water buoy must have a spar shape, according to the brief the buoy must have a height that is between 1400mm and 1800 mm above the sea with a diameter of 500 mm a height which can be noticeable with a naked eye and a fitted light , this complies with The standard BS ISO 20712-1: 2008 which was published in September 2011. This was updated in 2019 to BS ISO 7010:2019 Graphical symbols — Safety colours and safety signs.

The float assembly

The float assembly is what provides the specific levels of buoyancy if it is displacing the right amount of volume has the correct density including the mass of the whole buoy. the brief states that the buoy must be easily fixed there the floating assembly must be of a material that is can be easily fixed and has high robust. Examples of floating assemblies include (HDPE) Rope floats are made of compression moulded polyvinyl chloride (PVC). Some floats can be made of rigid polystyrene (PS-foamed plastic) ,FKM rubbers and VMQ rubbers if inflated with air specifically nitrogen gas to help with the float.

https://www.google.com/url?sa=i&url=https%3A%2F%2Faceboater.com%2Fen-us%2Faids-to-navigation&psig=AOvVaw0dccmTkJg8FSb8lrNlFIZS&ust=1709810204075000&source=images&cd=vfe&opi=89978449&ved=0CBEQjRxqFwoTCPiVosPB34QDFQAAAAAdAAAAABAp

The above image shows an example of a water buoy a rubber with inflated air.

TECHNOLOGIES

The brief describes that they want to design new buoys that can be found if they drift away and the problem usually comprises of these three issues

1. Lack of sensors- a sensor will allow the person in charge or whoever allowed to see or know the condition of the buoy

2. Lack of receiver – a receiver will allow the buoy itself to report to the person in charge.

3. Lack of action – in some situations it is best a buoy can correct or help itself csolve the problem

Solution to issue one
The sensors that are needed in this issue will be cameras that are water resistant or water proof of at least IP of 7 against water.

This is an example of a water camera that works in water and costs £124 .42 on amazon for each one, this camera has standard fixing and matches the requirements of the brief description.

The solution to issue two
An AIS AUTOMATED IDENTIFICATION SYSTEM devise

The solution for issue three would be a safety button with an alarm on the water buoy.

Task 2 Design

Assessment number (eg 1234-033)	8730-035
Assessment title	Employer-Set Project

Candidate name	<first name> <surname>
City & Guilds candidate No.	ABC1234

Provider name	<provider name>
City & Guilds provider No.	999999a

Task(s)	2
Evidence title / description	**Evidence expected for marking:** **Part A** Sketches for two designs (typically two A3 size drawings) Supporting Calculations **Part B** Annotated CAD drawing for one preferred design (typically two A3 size drawings) Reflective Notes **Evidence submitted for marking:** **Part A** Sketches for two designs (typically two A3 size drawings) Supporting Calculations **Part B** Annotated CAD drawing for one preferred design (typically two A3 size drawings) Reflective Notes
Date submitted by candidate	DD/MM/YY

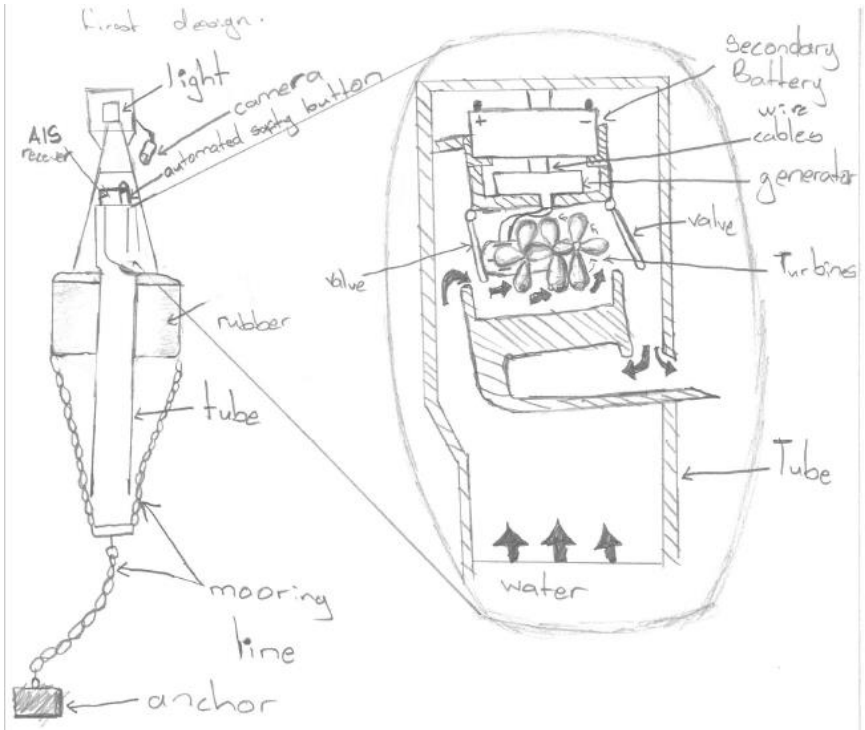

This buoy uses water as its source of renewable energy. It consists of a butyl inflated rubber to keep the buoy floating. The water goes through the tube and its flow capacity turns the turbines which generate energy to transfer to the battery. The electronic devices like AIS receiver, lights and safety button take power from the battery.

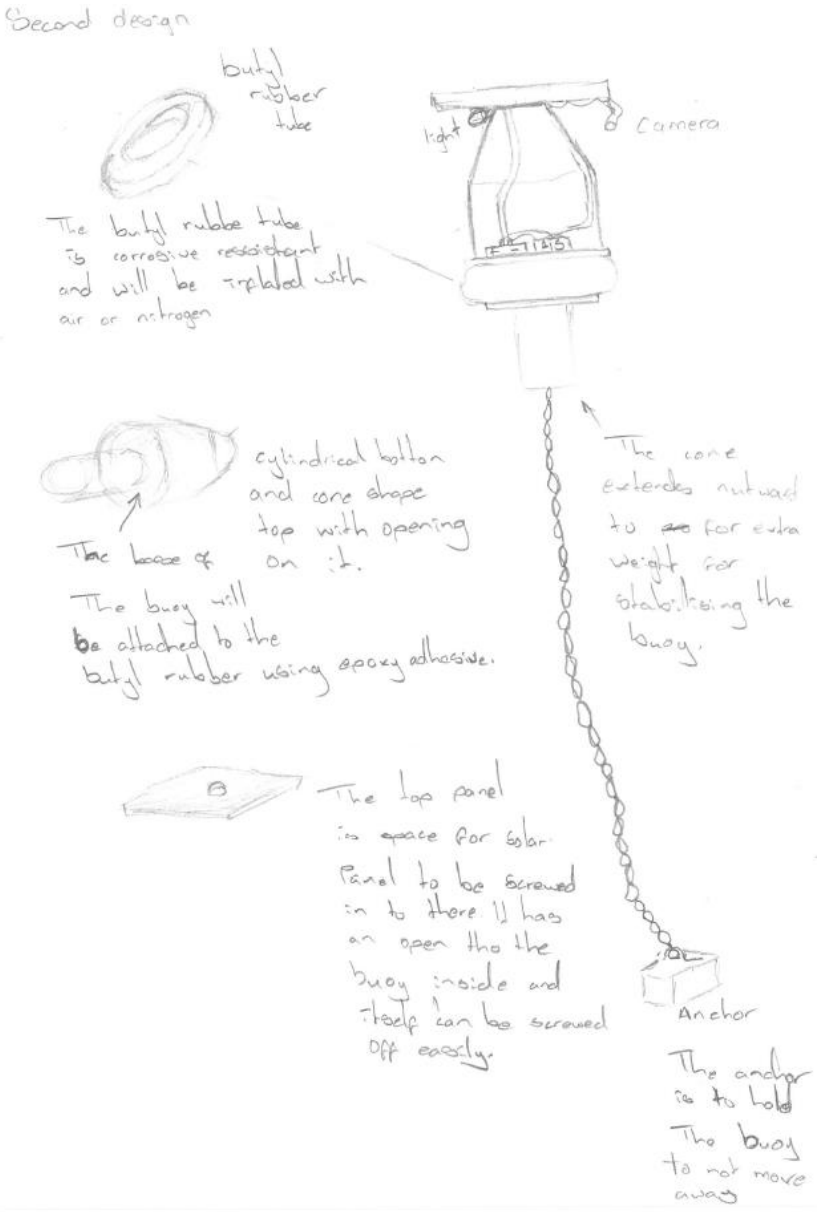

The unit weight of steel is 7.85 g/cm³

$$F_{ba} = \rho V a$$

$$= \frac{m}{\cancel{V}} \times \cancel{V} \times g$$

$$= m \times 9.8$$

$$F_{ba} = 9.8\,m \text{ of steel}$$

Volume of torus

$$= 2\pi R r^2$$

$$= 2 \times \pi (125)(750)(125^2)$$

$$= 920388727\ mm^3$$

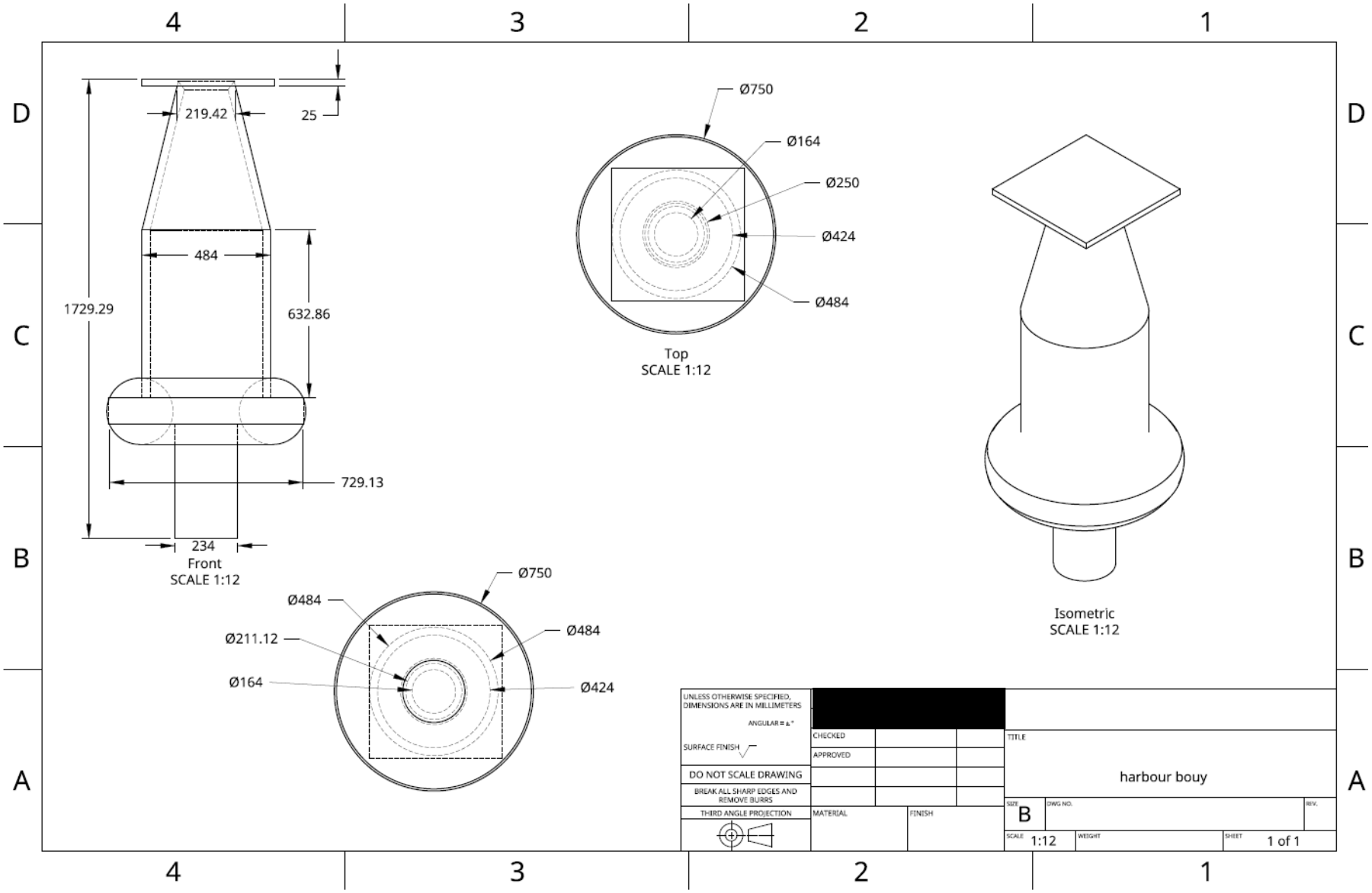
219.42
25
484
1729.29
632.86
729.13
234
Front
SCALE 1:12
Ø750
Ø164
Ø250
Ø424
Ø484
Top
SCALE 1:12
Isometric
SCALE 1:12
Ø750
Ø484
Ø211.12
Ø164
Ø484
Ø424
UNLESS OTHERWISE SPECIFIED, DIMENSIONS ARE IN MILLIMETERS
ANGULAR = ±°
SURFACE FINISH
DO NOT SCALE DRAWING
BREAK ALL SHARP EDGES AND REMOVE BURRS
THIRD ANGLE PROJECTION
CHECKED
APPROVED
MATERIAL
FINISH
TITLE
harbour bouy
SIZE
B
DWG NO.
REV.
SCALE
1:12
WEIGHT
SHEET
1 of 1

Both buoys are constructed with same type of materials but in different layout. Both buoys are constructed with steel and rubber. Steel and rubber have different properties but because steel is denser, we rubber is used to make both of the buoys less denser have ability the ability to float .the first buoy consist of a 10 millimetre solid cylindrical base with a bottom that must stick to a torus rubber tube and with an opening of a 3 millimetre thick long tube that is submerged in water which allow the water to go turn the turbines to generate power for the secondary battery that sits on top of the closed tube and turbines way . on the side of the battery is a generator that is connected to the turbines then to the battery with copper wires. The same base consists of 4 bars of steel that heightens the buoy by 1000 millimetres to where the top. These steel bars are painted in red or green. The second buoy is cylindrical, and cone shaped with that exposes the part at the top for wiring it has the same solid cylindrical base with a bottom that must stick to a torus rubber tube. The same cylindrical buoy base holds space for devises with top opening to inside the whole buoy.

The first design has space for devise outside while, the second design has space for devises inside. Both designs come with a receiver, so whoever is in charge can control, see and get information about the situation of the buoy.

Both designs have lights and cameras for security and safety of the buoy, the camera can view what is going on around the area while light can turn on at night or a specific colour when remotely controlled.
The outside body of the second design will be painted in colour accordance of whether there are of which lane.

I chose to go with second design because it is more modernly aesthetic than the first one and is also simpler.

Task 3 Plan

Assessment number (eg 1234-033)	8730-035
Assessment title	Employer-Set Project

Candidate name	<first name> <surname>
City & Guilds candidate No.	ABC1234

Provider name	<provider name>
City & Guilds provider No.	999999a

Task(s)	3
Evidence title / description	**Evidence expected for marking:** **Part A** Programme of work (two sides of A4) **Part B** Supporting Statement (typically 1000 words) **Evidence submitted for marking:** **Part A** Programme of work (two sides of A4) **Part B** Supporting Statement (typically 1000 words)
Date submitted by candidate	DD/MM/YY

PROGRAM WORK

The project will be split into to two main parts, the manufacturing of the product and its installation. The manufacturing side include all relevant processes required to produce the product out of its environment. The installation side of this task involves placing to product in the correct environment.

MANUFACTURING
Key parts

Stainless steel is a very necessary component of the water buoy, provide a modern aesthetic structure and does not corrode. Stainless steel is a non-ferrous alloy metal that composes of iron, carbon, nickel, chromium and other metals.

SUPPORTING STATEMENT:

The basic health and safety factors Appy to any project. This includes things such as choosing what type of battery or electronics to put inside the buoy. The safe way is to check if the electronics are the right one and have IP of at least 7 to water. The buoy also works with regulations that are important for the safety of all stakeholders. Firstly COSHH applies to any w3eilding done within the manufacturing and assembly of the project, to comply with this regulation, all welders working with stainless steel will be TIG welding, with ventilated helmets to reduce the chance of harm via fumes that may arise if other forms of welding such as arc welding are used. Within the maintenance box there will be RIDDOR book to make sure each accident is well documented so that improvements can be made to reduce the risk of those accidents happening

Task 4 Present

Assessment number (eg 1234-033)	8730-035
Assessment title	Employer-Set Project

Candidate name	<first name> <surname>
City & Guilds candidate No.	ABC1234

Provider name	<provider name>
City & Guilds provider No.	999999a

Task(s)	4
Evidence title / description	**Evidence expected for marking:** Presentation materials **Evidence submitted for marking:** Presentation materials
Date submitted by candidate	DD/MM/YY

FINAL DESIGN
KEY FEATURES:
Materials
Stainless steel, provide a modern aesthetic structure and does not corrode. Alloys in the steel gives the steel properties like low reactivity and hardness
Rubber, have different properties with steel but because steel is denser, we rubber is used to make both of the buoys less denser have ability the ability to float.

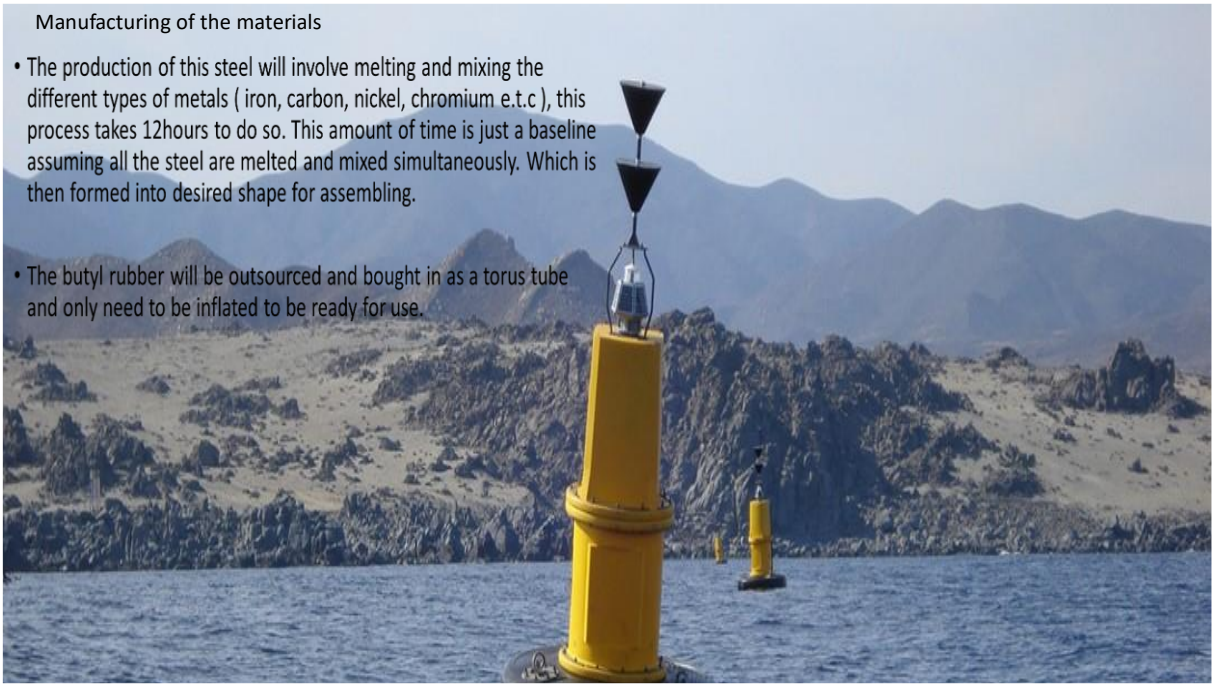
Manufacturing of the materials
• The production of this steel will involve melting and mixing the different types of metals (iron, carbon, nickel, chromium e.t.c), this process takes 12hours to do so. This amount of time is just a baseline assuming all the steel are melted and mixed simultaneously. Which is then formed into desired shape for assembling.
• The butyl rubber will be outsourced and bought in as a torus tube and only need to be inflated to be ready for use.

Alert and Tracking buoys

Each camera can be outsourced and bought in as a finished product. For these to work proficiently they are to be mounted on top edge of each buoy at the facing down on most part of the buoy to give whoever is in charge a clear and informative view of the buoy.

The ais or the receiver will also be bought as a finished product. for the receiver to be able to work efficiently needs to be manufactured by experts in that field. Each receiver will be placed inside on the space in the middle of the buoy because it's the most weatherproof space of the whole buoy.

The PSI sensor will be bought as a finished product as well. this is a critical part of the safety of the buoy and should be manufactured by experts of that field Aswell.

Employer-Set Project – Presentation Q & A Record (Task 4)

8730-14 T Level Technical Qualification in Design & Development for Engineering and Manufacturing

8730-035 Employer-Set Project (Summer 2024)

Candidate name	8730-035
City & Guilds candidate No.	ABC1234
Date	DD/MM/YY

Provider name	<provider name>
City & Guilds Provider No.	999999a

Record observation notes below to inform external marking. **Notes must be detailed, accurate and differentiating.**

Tutor questions to candidate	Candidate responses
What was the most difficult part of the brief to meet?	Responded to this with regards to materials and dimensions.
What impact would doubling the order have on your production plan?	Discussed timescales and resources and the impact would have on.
How did you make your product as sustainable as possible?	Discussed waterproofing and materials to help increase sustainability.

Any other comments

Tutor signature	Date
X	DD/MM/YY

If completing electronically, double click next to the ‘X’ to add an electronic signature once the record is **finalised**.

Get in touch

The City & Guilds Quality team are here to answer any queries you may have regarding your T Level Technical Qualification delivery.

Should you require assistance, please contact us using the details below:

Monday - Friday | 08:30 - 17:00 GMT

T: 0300 303 53 52

E: **technicals.quality@cityandguilds.com**

W: **http://www.cityandguilds.com/tlevels**

Web chat available **here**.

The T Level is a qualification approved and managed by the Institute for Apprenticeships and Technical Education.

Copyright in this document belongs to, and is used under licence from, the Institute for Apprenticeships and Technical Education, © 2024. 'T-LEVELS' is a registered trademark of the Department for Education. 'T Level' is a registered trademark of the Institute for Apprenticeships and Technical Education. 'Institute for Apprenticeships & Technical Education' and logo are registered trademarks of the Institute for Apprenticeships and Technical Education.

Every effort has been made to ensure that the information contained in this publication is true and correct at time of publication. However, City & Guilds products and services are subject to continuous development and improvement, and the right is reserved to change products and services from time to time. City & Guilds cannot accept responsibility for any loss or damage arising from the use of information in this publication.

City & Guilds is a trademark of City & Guilds Limited, a company registered in England and Wales (company number 16513878). City and Guilds Group, Giltspur House, 5–6 Giltspur Street, London EC1A 9DE