T Level Technical Qualification in Engineering, Manufacturing, Processing and Control (8730-13)

8730-034 Employer-Set Project Exemplar – A Grade

Summer 2024

Contents

Introduction **2**

Task 1 Research **5**

Task 2 Report **9**

Task 3 Design **15**

Task 4 Present **19**

Introduction

Summer 2024 Results

This document is aimed at providers and learners to help understand the standard that was required in the summer 2024 assessment series to achieve an A grade for the 8730-034 Engineering, Manufacturing, Processing and Control Employer-Set Project (ESP).

Providers and learners may wish to use it to benchmark the performance in formative assessment against this to help understand a potential grade that may be achieved if a learner was to attempt the next summative assessment series.

The Employer-Set Project is graded A* to E and Unclassified.

The exemplar evidence provided for the A grade displays the holistic standard required across the tasks to achieve the A grade boundary for the summer 2024 series.

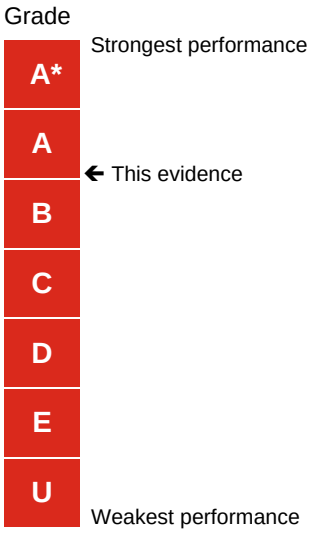

The Employer-Set Project brief and tasks can be downloaded from here.

Important things to note:

- We discussed the approach to standard setting/maintaining with Ofqual and the other awarding organisations before awarding this year. We have agreed to take account of the newness of qualifications in how we award this year to recognise that students and teachers are less familiar with the assessments (grading-arrangements-for-vtqsand-technical-qualifications-within-t-levels-in-the-academic-year-2023-to-2024) whilst also recognising the standards required for these qualifications.

- The exemplar evidence presented, as a whole, was sufficient to achieve the A grade. However, performance across the tasks may vary (i.e. some tasks completed to a higher/lower standard than an A grade).

Marking of this Employer-Set Project is by task and Assessment Objective, below is a summary of these along with the mark achieved by the evidence presented and the maximum mark available for each aspect.

Task	Assessment Objectives	Mark achieved	Max mark available
Task 1 Research	- AO1 Plan their approach to meeting the project brief - AO2a Apply core knowledge - AO3 Select relevant techniques and resources to meet the brief	4	9
	- AO2b Application of core skills	4	6
Task 2 Report	- AO1 Plan their approach to meeting the project brief - AO3 Select relevant techniques and resources to meet the brief	4	6
	- AO2a Apply core knowledge	5	6
	- AO2b Application of core skills	4	6
Task 3 Design	- AO1 Plan their approach to meeting the project brief - AO3 Select relevant techniques and resources to meet the brief	5	6
	- AO2a Apply core knowledge	4	6
	- AO2b Application of core skills	4	6
	- AO5a Realise a project outcome – was the right outcome achieved - AO5b Review how well the outcome meets the brief, how well the brief was met, the quality of the outcome in relation to the brief	4	6
Task 4 Present	- AO1 Plan their approach to meeting the project brief - AO3 Select relevant techniques and resources to meet the brief	4	6

	- AO2a Apply core knowledge	5	6
	- AO2b Application of core skills	4	6
	- AO5a Realise a project outcome – was the right outcome achieved - AO5b Review how well the outcome meets the brief, how well the brief was met, the quality of the outcome in relation to the brief	4	6
Maths	- AO4a Use of Math skills	2	3
English	- AO4b Use of English skills	3	3
Digital skills	- AO4c Use of digital skills	3	3

What evidence was being assessed for the maths, English and digital skills:

Maths:
- Research Notes – the cost of the materials (Task 1)
- Relevant design calculations - the increase in the length of the valve and adaptor assembly compared to the manual valve and the cost of the materials (Task 3)

English:
- Research notes (Task 1)
- Report (Task 2)
- Reflective notes (Task 3)
- Video of presentation and materials to support presentation (e.g. slides etc) (Task 4)

Digital:
- Types of sources used for Research (Task 1)
- Report (Task 2)
- Drawings (Task 3)
- Presentation materials (slides, handouts, notes etc) (Task 4)

Task 1 Research

Assessment number (eg 1234-033)	8730-034
Assessment title	Employer-Set Project

Candidate name	<first name> <surname>
City & Guilds candidate No.	ABC1234

Provider name	<provider name>
City & Guilds provider No.	999999a

Task(s)	1
Evidence title / description	**Evidence expected for marking:** Research notes (typically 1500 words) List of references/sources **Evidence submitted for marking:** Research notes (typically 1500 words) List of references/sources
Date submitted by candidate	DD/MM/YY

Task 1 – Research

Introduction

WF Engineering a medium sized plant and equipment manufacturer for the food manufacturing sector would like to improve productivity while decreasing the amount of labour required by fitting in a pneumatic valve to their pipes which will be controlled from a control panel placed elsewhere. To do this however an adapter will need to be designed with one end connecting to the 1” inch British standard pipe thread in the valve while the other end 2” 7 Thread per inches British standard Whitworth threat to allow the use of the existing pipe connection nuts.

I have been asked to review the project brief and research potential wats to design said adapter that considers the general and specific issues outlined in the brief.

Specific and General issues

Specific and general issues that must be considered whilst research are things like that fact that changing to a pneumatic valve operation requires 28 adapters to be made therefore the adapters design and materials must be considered as they will be manufactured in one batch.

Another consideration that must be considered is that the pipework must be modified to accommodate for the increased width of the pneumatic valve which is why the adapter must be 2”7 inches. This means that it’s required to know how much the pipework will be shortened by. This shortening must be done on all pipes the 28 adapters go connect to so the modification details will remain the same for each. However, the design of the adapter must be able to co-exist with the already existing seals in the existing pipe connections.

Finally, the plant is classed as a food manufacturing plant meaning that the material that is chosen to be used in the manufacturing of the adapters must be compatible with food regulations whilst also not having any cavities or voids (empty spaces where there is no material) that would hinder effective cleaning.

Design

Looking into design requirements fa specified in the brief I have noticed that they have asked for a feature to engage a tool to hold the adapter in place whilst tightening the pipework nut along with how it will be held whilst its tightened. To combat this my design will incorporate a feature that will allow for a spanner to attach onto it so it can be screwed into place or a small notch for it to be held whilst tightened.

Potential issues that may result in the design not being watertight are cracks voids or cavities in the material.

2 inches = 50.8 millimetres

7 TPI (threads per inch)

2 x 7 = 14.

There will be 14 threads in total with a thread pitch of 3.6286 millimetres.

This design accurately shows where the o ring/seal is going to be placed and incorporates the feature required to engage a tool to hold the adapter into place whilst tightening the pipe work. This feature is quite wide so it will make it easier for something like a spanner to latch onto it.

Although this design has a place where it can be held whilst tightening it can. This design may not be used as it lacks the feature of showing where an o ring could be placed which could lead to potential leaks.

This design features space for the o ring on both sides the feature that will allow it to be held and a focussed nose to ensure that it is watertight.

Materials

In terms of machine material regulations in the food manufacturing plant/sector there are standards that are put in place to ensure food safety. Machines used in the food manufacturing plant must be constructed with materials that are safe when they encounter food and can withstand the cleaning process and be easily sanitized. These materials typically non-toxic, rust and corrosion resistant and easy to clean. Commonly materials like stainless steel are used along with plastics and aluminium however in consideration of the brief for the adapter a metal is most likely to be used. These regulations prevent contamination and maintain the standard to the HSE and other regulatory boards like the FSA (Food Standard Agency). This is why when determining the material that is going to be used its important to check if it is up to these standards.

“The choice of material for a pipe adapter depends on factors such as the type of fluid or gas being transported, the pressure and temperature conditions, and compatibility with other materials in the system. (Dev)” Currently the pipework and pumps in the system the adapters are going to are made from stainless steel however another good choice is aluminium each having their own benefits. The

material chosen needs to be able to withstand water pressure of up to 1 bar pressure therefore it must be strong. With stainless steel, it cannot rust which is vital as water will be running through it.

To be cost effective when choosing the materials, it is known that "**Aluminium is typically cheaper than stainless steel.** This is because aluminium is more commonly found, has a lower melting point, and is easier to shape, especially when it comes to rolling it out into thin sheets. Aluminium is soft and easier to cut and form, while stainless steels are harder and are especially harder to form than aluminium (Metal Supermarkets, 2014)" however stainless steel is stronger more durable and has a better corrosion resistance so in this case these features are required more for then aluminium's easy workability although both should still be considered as valuable options.

Pipe adapters are usually made by machining or extrusion. Extrusion involves forcing a heated pipe into a die that is in the shape of an adapter.

Possible Extra Components

To increase how watertight the flange of the connecting pipe to the adapter is you could provide a seal between them by use of an O ring. "O-rings are very commonly found in pumps, cylinders, connectors and valves, helping to seal joins between separate parts and prevent leaking of fluids and gases. They're used with static, dynamic, hydraulic and pneumatic components (Ltd)" They are flexible due to them being rubber it easy to install and when in place will ensure that it is watertight to 1 Bar pressure as when the two parts are compressed together, they form a tight seal preventing water from leaking out.

References

Everything You Need To Know About O-Rings And Seals | RS (rs-online.com)

Hygienic Design of Equipment in Food Processing | Food Safety (food-safety.com)

Materials Used in Food Processing Equipment - Innotech Process Equipment

What is a Pipe Adapter? Their Types, Materials, Applications (PDF) – What Is Piping

Which Is More Expensive? Aluminum Plate Or Stainless Steel Plate? - METAL FAQ

Image Reference

LENZ 8-6APN STR.THD.PIPE ADAPTER | Air & Hydraulic Equipment,Inc. (aheinfo.com)

3/8" Male NPTF X 1/2" Male NPTF Reducing Adapter | MB Sturgis

Task 2 Report

Assessment number (eg 1234-033)	8730-034
Assessment title	Employer-Set Project

Candidate name	<first name> <surname>
City & Guilds candidate No.	ABC1234

Provider name	<provider name>
City & Guilds provider No.	999999a

Task(s)	2
Evidence title / description	**Evidence expected for marking:** Written report (typically 2000 words) **Evidence submitted for marking:** Written report (typically 2000 words)
Date submitted by candidate	DD/MM/YY

Task 2 – Report

Table of Contents

Introduction 10
Safety regulations 10
Our Choice of Material 11
Design Methodology 11
Design Choice 12
Cost Analysis 12
Measurements 13
Analysis and testing 13
Conclusion 14
Bibliography 14

Introduction

WF Engineering is a manufacturer of medium sized plant and equipment for the food manufacturing sector work out of a manually controlled process plant all valves having to manually turned by hand each of these valves are connected to a pipework system. The employer wants to replace the twenty-eight manual valves with pneumatic valves to significantly improve productivity and make the system less manually taxing. We have been tasked by the Engineering manager to do this although an adapter will need to be designed with one end connecting into the internal 1-inch British standard pipework thread in the valve while the other end connects into the 2 inch 7 TPI British standard Whitworth thread to allow the use of the currently existing pipe. However, this also requires for the connecting pipework to be shortened by cutting a certain amount of the pipework off to accommodate the increase width of the adapter.

Safety regulations

The plant our adapters we design are going into is classed as a food manufacturing plant meaning that our chosen material must be compatible with food regulation laws whilst also

not having any cavities or voids in them (these are empty spaces where there is no material) so nothing gets stuck or can hinder the cleaning and sanitation process off the plant.

There are clear guidelines in terms of machine material regulations in the food manufacturing sector that have been put into place to ensure food safety once manufacturing. Most commonly these outline the key details that determine whether the material is safe to be used in machining near food and/or around food this is because machines in the food manufacturing plant must be constructed with materials that are safe when they encounter wood or liquid in our case liquid due to them being under heavy constrictions with regulatory boards such as the FSA Food Standard Agency and HSE ensuring they are up to the standard. The material that I have chosen must be non-toxic, rust and corrosion resistant and easy to clean as requested by our employer. Commonly in the food manufacturing sector materials such as Stainless steel, Aluminium and plastics are used however in consideration to the brief the design for our adapter should be made out of a metal thus making Stainless steel and aluminium are two main choices in terms of material as they are both viable choices and up to standard.

Our Choice of Material

When it comes to the better suited material choice for our adapter there are numerous factors to consider. These can be things such as the type of fluid that is running through the adapter, its compatibility with other materials in the system along with the pressure and temperature conditions (Dev). The final material chosen must be able to withstand up to 1 bar pressure meaning that it must be strong and impact resistant. Currently the systems pipework and pumps are constructed out of stainless steel although aluminium is quite a practical choice as well due to its pricing as it is more commonly found making it cheaper which must be considered due to their having to be twenty-eight made. Aluminium is easier to shape due to its low melting point and is also soft and easier to cut and form (Metal Supermarkets, 2014). In this case however I believe that stainless steel is a better option due to its strength and durability which out ways the desirable characteristics of aluminium as it has a better corrosion resistance making it compatible with the standards set by the FSA and HSE along with its higher resistance to impacts. Stainless steel also possesses no cracks voids or cavities which was specifically requested.

Design Methodology

Male pipe adapters are usually made by machining, casting or extrusion. since ours is going to be made from stainless steel, the manufacturing process will involve shaping and threading the adapter design to ensure a secure and watertight connection. The stainless-steel material provides strength which will allow for a strong connection between the pipe and the pneumatic valve once the adapter is in place. We will heat a stainless-steel bar and force it through a die. The in which will be shaped to create the male thread patter on 1” BSP

and 2 “BSW as the heated stainless-steel bar gets extruded it takes the form of the design in the die and thus makes the pipe to valve adapter. Using this method will allow for 28 adapters to made effectively and efficiently as it is precise and easy as although it requires specialised equipment and careful control otherwise it could lead to defects with the right equipment it is a very effective method.

Design Choice

Out of the three designs I have researched, I have decided that although each design incorporated their own features whilst being quite similar. I think that this sketch will be the best option this is because its design accurately incorporates a feature to hold the adapter

whilst tightening or loosening the connecting pipework nuts whilst being quite wide so there is enough space for the spanner to latch onto it which is why the hexagonal shape of the feature is needed as it allows for more angles to hold onto. This design was determined to be the best out of the three as it most accurately represented the design of the adapter I am going to design.

Cost Analysis

In consideration to our design method I have decided that it would be best to purchase bars of stainless steel at grade 306 or 316. Depending on how much we need for the 28 adapters it would be best to get steel at grade 304 however at 316 it provides better corrosion resistance although both have good corrosion resistance to begin with. In this case however I think that due to the longevity required of the adapters and how it will be used in a food manufacturing plant where liquid will be constantly running through it the higher corrosion resistance will be a very useful feature rather than accosting the price of the adapters lower to gain the same but slightly lacking results therefore we are going to use 316 Stainless steel round bars with a diameter of three mm so that it can easily be extruded into the die.

(click the image to see enlarge image)

3mm Diameter 316 Stainless Steel Round Bar

£2.48 p/m £2.98 p/m inc VAT

Same Day Despatch

Fast Delivery

Only applies to orders placed before 2pm. Other items not offering 'same day despatch' must be ordered separately. Orders containing an item that weighs over 70kg are excluded. For more information about delivery click here.

Product Information SKU 1661

FREE Custom Cutting

Length: mm

Please check your measurements carefully when ordering as custom cut items are non-returnable.
Please note that our cutting tolerances are -0 +3 mm

Size	Unit Price (ex VAT)	Unit Price (inc VAT)	Qty
1 metre	£2.45	£2.94	0
2 metres	£4.95	£5.94	0
3 Metres	£7.45	£8.94	0

Fast & Secure Add to Basket

The Stainless-steel bar is most suitable for our adapter is priced at £2.48 per meter. We will require twenty-eight adapters and each bar can make two adapters, meaning that we only require 14 bars. The total cost (excluding VAT) amounts to £34.30 making the final price (including VAT) £41.16.

Measurements

To fit the adapter into the section of pipework, 90 mm will need to be cut off. The adapter itself will have a hexagonal feature with a width of 40 mm. Upon employer request, each side of the thread on the adapter will have a depth of 22 mm. The overall width of the adapter will then be is 90 mm. By subtracting the combined thread depth of 44 mm from the adapter width along with the hexagonal features own width there will be 6 mm remaining.

The threads require an internal 1-inch British standard Pipework thread which will make the diameter 33.25 millimetres whereas the 2-inch British standard Whitworth thread will have a diameter of 50. 8 millimetres. The hexagonal feature must have a length of 60 mm to accommodate both of their diameters as well as a wide enough hole going through the middle to allow the water to flow through efficiently.

Analysis and testing

For us to gauge the full extent of the adapter's capabilities, I think that it is necessary to put our adapter through a series of tests so that it reaches the project briefs requirements and

functions properly. To ensure that it is watertight to 1 bar pressure we will conduct a pressure test to ensure it can withstand the 1 bar of water pressure without any leaks. We may also inspect our adapter once it has come out of the die to see if there are any visual faults. Other tests the adapter may go through is a functionality test. This test will involve connecting the adapter to different pipework systems and checking if it securely locks in place and provides a stable connection.

Conclusion

In conclusion, the adapter we have been tasked to design by WF Engineering will be made from a 316 Stainless Steel bar that has been extruded into a specialised die in the shape of an adapter that is 90 millimetres long. By the use of the material stainless steel, we are able to know that it will comply with the FSA and HSE regulations this is due to stainless steel being non-toxic, corrosion resistant and rust resistant as well as the fact that it will go with the current system in place as it is also made with stainless steel. The total cost of the materials required for the adapter is £41.16 including VAT and will have to undergo an inspection for voids, cavities or cracks along with a pressure test to make sure it can withstand up to 1 bar pressure without leaking, ensuring that it is watertight. It will have a hexagonal feature to allow for it to be tightened into place using a spanner or your own hands.

Bibliography

Dev, A. K. (n.d.). *What is a Pipe Adapter? Their Types, Materials, Applications.* Retrieved from What is Piping: https://whatispiping.com/pipe-adapter/

Metal Supermarkets. (2014, 12 15). *10 Differences Between Aluminum and Stainless Steel.* Retrieved from Metal Supermarkets: https://www.metalsupermarkets.com/10-differences-aluminum-stainless-steel/

Metals 4 U. (2024, 03 08). *Metals 4 U.* Retrieved from 3mm Diameter 316 Stainless Steel Round Bar: https://www.metals4u.co.uk/materials/stainless-steel/stainless-steel-round/1661-p

Task 3 Design

Assessment number (eg 1234-033)	8730-034
Assessment title	Employer-Set Project

Candidate name	<first name> <surname>
City & Guilds candidate No.	ABC1234

Provider name	<provider name>
City & Guilds provider No.	999999a

Task(s)	3
Evidence title / description	**Evidence expected for marking:** Part A – Dimensioned adapter drawing (A3 size) and a drawing showing pipework modifications (A3 size) Part B – Supporting design calculations and reflection notes (typically two sides of A4) **Evidence submitted for marking:** Part A – Dimensioned adapter drawing (A3 size) and a drawing showing pipework modifications (A3 size) Part B – Supporting design calculations and reflection notes (typically two sides of A4)
Date submitted by candidate	DD/MM/YY

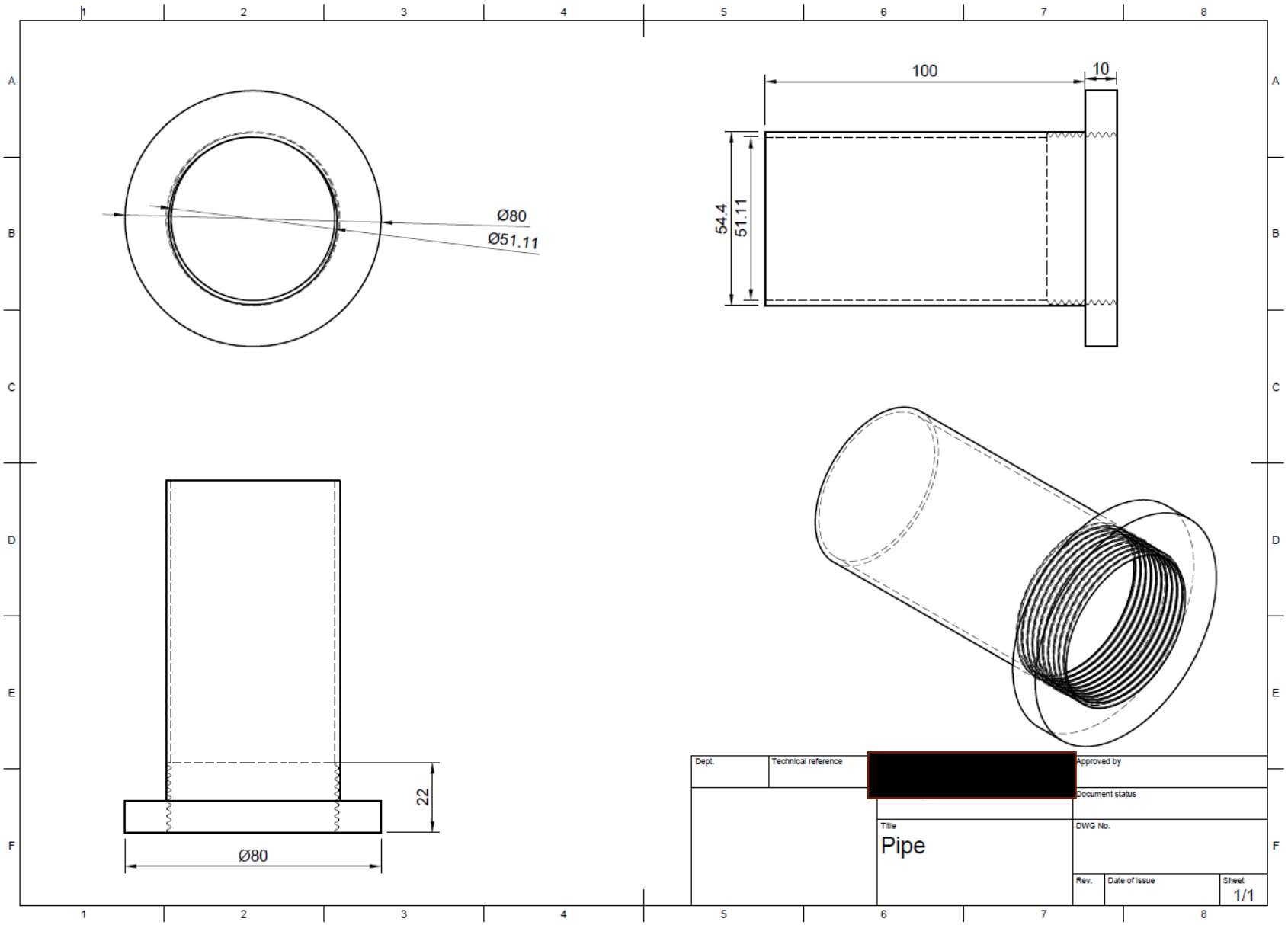
Ø80
Ø51.11
100
10
54.4
51.11
22
Ø80
Dept.
Technical reference
[redacted]
Approved by
Document status
Title
Pipe
DWG No.
Rev.
Date of issue
Sheet
1/1

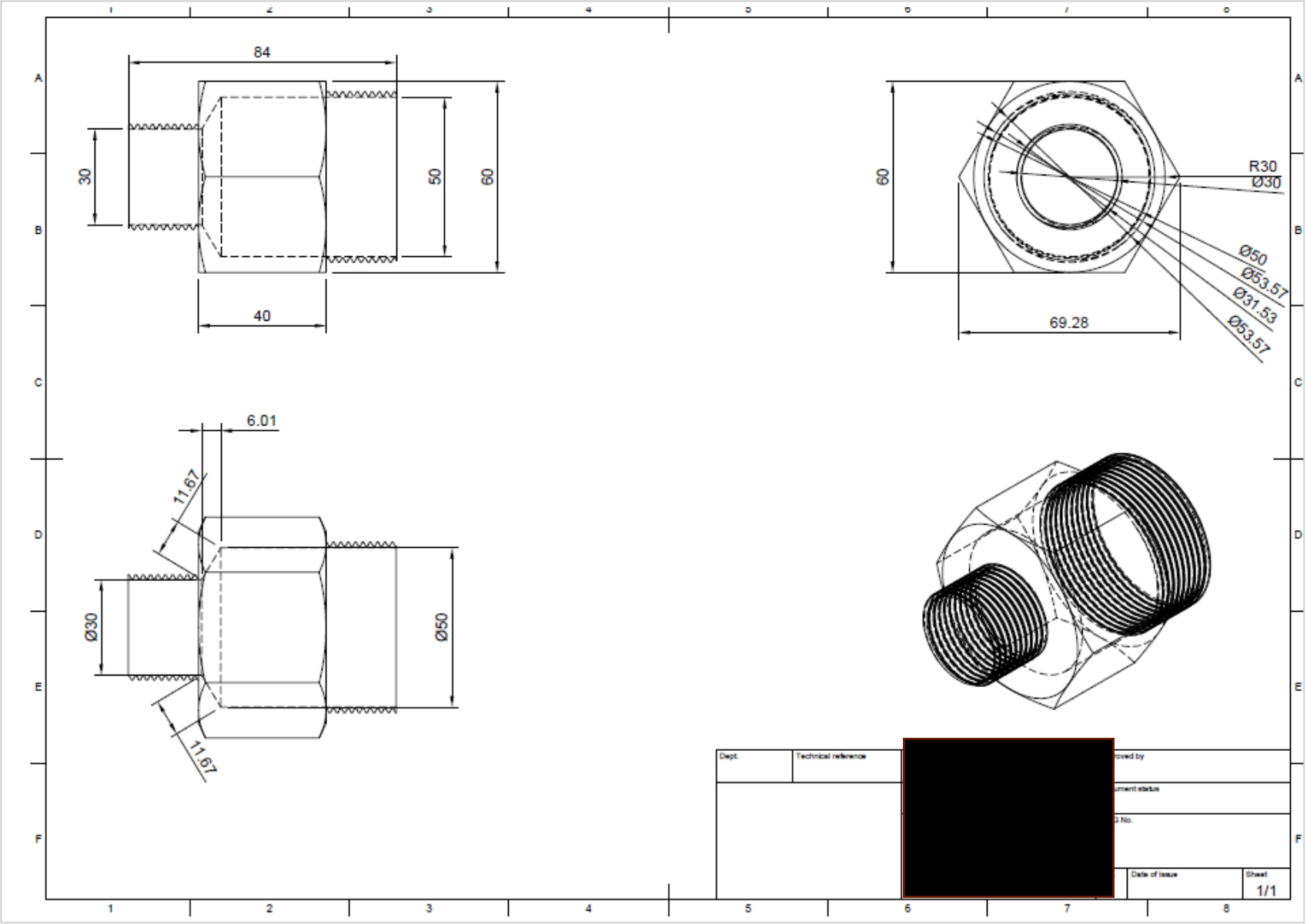
84
30
50
60
40
60
R30
Ø30
Ø50
Ø53.57
Ø31.53
Ø53.57
69.28
6.01
11.67
Ø30
Ø50
11.67
Dept.
Technical reference
Date of issue
Sheet
1/1

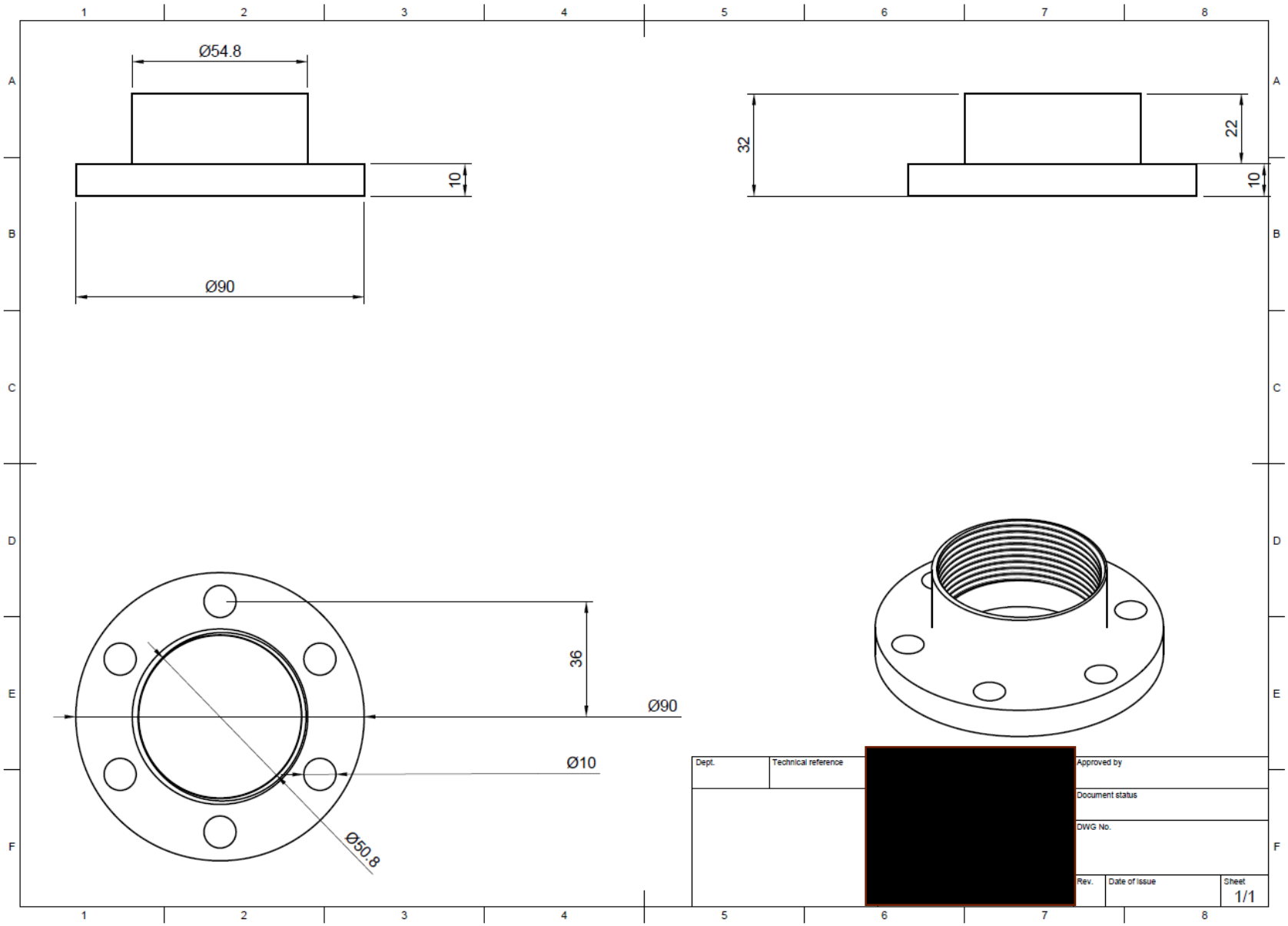
Ø54.8
10
Ø90
32
22
10
36
Ø90
Ø10
Ø50.8
Dept.
Technical reference
Approved by
Document status
DWG No.
Rev.
Date of Issue
Sheet
1/1

1.1. My Final Design Rationale

Out of all designs I have researched I have concluded that the design I have created will be the best option for the client as it meets WF Engineering's requirements. Factors that I considered whilst making this adapter was how effective it would be while connecting pipes to pneumatic valves and whether the design is functional or not. The design allows for a secure, watertight, leak free connection ensuring that the flow of water will not be hindered by anything. Another consideration I took into account was the specific and general issues that the brief specified along with how the adapter should be able to be installed easily so I have incorporated a feature which allows for the adapter to be held whilst being put into place or tightened into the connecting pipe work. It is 40 millimetres making it efficiently allow for this to occur by the use of a spanner or other recommended tools. Due to the adapters design 28 of them can be manufactured easily in one batch as well as it being made from stainless steel, so the material is compatible with food manufacturing plant regulations.

My adapter is fit for purpose as it guarantees an effective and reliable connection between the pneumatic valve and pipes together whist having no cracks voids or cavities that would cause the build-up of debris or contaminants that could lead to corrosion or blockages. This guarantees a long lifespan for the adapter as well as reducing the need for replacements and maintenance along with guaranteeing that the adapter will not leak or fail under pressure.

1.2. Calculations

With the combined size of the 90 mm pneumatic valve along with the extra 40mm from the adapter (as although the adapter we designed is 86 mm long 22 mm on each side will be going internally to the pipe and the valve leaving 40mm in the middle to hold the adapter into place whilst tightening) the length is 130mm. This means that an extra 40 mm must be cut off as the current manual valve is already the same size as the new pneumatic valve.

To identify the full cost of materials we must figure out the total mass of the adapter I have designed to determine how much stainless steel will be required to make it. To do this I will.

My design has a total surface area of 1334.212 mm squared.

Task 4 Present

Assessment number (eg 1234-033)	8730-034
Assessment title	Employer-Set Project

Candidate name	<first name> <surname>
City & Guilds candidate No.	ABC1234

Provider name	<provider name>
City & Guilds provider No.	999999a

Task(s)	4
Evidence title / description	**Evidence expected for marking:** Presentation materials **Evidence submitted for marking:** Presentation materials
Date submitted by candidate	DD/MM/YY

WF Engineering's proposed adapter

BY

Hello and welcome WF Engineering. Today I am here to present to you, my design.

You tasked me to replace the manual valves in your processing plant with pneumatically operated valves which can be controlled from a control panel however to do this, an adapter was needed to be designed with one end connecting into the1 inch BSP thread in the valve and the other to the 2"7 TPI BSW thread to allow the use of existing pipe connection nuts.

In designing this adapter many issues had to be considered to make the adapter the best it could be.

Introduction:

Problems with the existing valve

THE EXISTING SYSTEM IS MANUALLY OPERATED MEANING THAT SOMEONE MUST MAUNALY TURN THE VALVE THEMSELVES FOR THE SYSTEM TO FUNCTION.

THIS IS WHY TO INCREASEPRODUCTIVITY AND REDUCE THE AMOUNT OF LABOUR REQUIRED YOU HAVE ASKED FOR A PNEUMATIC VALVE OPERATION TO BE PUT INTO PLACE

Issues

There are two types of issues that were identified in the construction of the adapter this being:

GENERAL ISSUES:

My design for the adapter must be able to incorporate existing seals in the existing pipe connections will remain functional

Along with each threaded interface having to be watertight up to 1 bar pressure

It must also have a feature to allow for the adapter to be held and tightened into place

SPECIFIC ISSUES:

When it came to the materials, I had to consider that the plant is classed as a food manufacturing plant meaning that the material chosen had in the manufacturing of the adapter had to be compatible with food regulations.

As well as the fact that changing to a pneumatic operation entirely will require 28 adapters to be made therefore my design had to be capable of being manufactured in large quantities and capable of being made efficiently

Lastly, I had to consider that the pipework would have to be shortened to combat the increase in length due to the valve and adapter.

Solutions

To progress with the task, I had to identify ways in which I could combat each request and issue to make a flawless design model. I did this by:

FINDING A MATERIAL THAT IS NON-TOXIC, RUST AND CORROSION RESISTANT AND EASY TO CLEAN AND UNDERGO YOUR SANITATION PROCESS SO THAT IT SAFE UNDER THE FSE (FOOD SAFETY AGENCY) AND HSE REGULATIONS.

USING A MATERIAL THAT CONTAINS NO CRACKS, VOIDS OR CAVITIES(EMPTY SPACES) SO NOTHING CAN LEAK OR GET STUCK IN IT

DESIGNING AN ADAPTER THAT ISN'T TOO COMPLEX TO HASTEN THE MANUFACTURING PROCESS, SO IT IS EFFICIENT

CONSTRUCTING MY ADAPTER AND USING ITS DIMENSIONS TO FIGURE OUT HOW MUCH PIPEWORK NEEDS TO BE REMOVED

ENSURING THAT THE THREADED INTERFACES WORK IN CONJUNCTION WITH EACH OTHER TO ALLOW FOR NO WATER TO ESCAPE

Design Specifications

In designing the adapter, the two main requirements were a feature that can hold the adapter in place whilst it is being tightened into the pipework nut along with the possibility of cracks voids or cavities in the material which would prevent it from being watertight. This is why the design I have constructed is the best choice. The feature requested in the middle will be 40 mm long allowing for the use of a spanner as well as it being hexagonal having more sides which will allow for ease when it is tightened.

Materials

The two materials that I have researched are both viable choices these being aluminium and stainless steel. Aluminium easier to shape due to its low melting point and is also easier to cut and form. While Stainless steel is more difficult to cut and form it offers better corrosion resistance making it more compatible with the standards set by the FSA and HSE along with stainless steels higher impact resistance which will help it withstand up to 1 bar pressure which is why I have chosen Stainless steel for the adapter.

The cost of stainless steel

The source company Metals4U sell a round 316 stainless steel bar which will then be extruded through a die in the shape of the adapter.

Using my calculations I have found that by using 1 meter of a bar and extruding it into a die that it will make two adapters. This means that only 14 1-meter bars will be required making the total price £41.16

This excludes the cost for possible specialised equipment required such as a die cas in the shape of the adapter as well as other equipment required to extrude metal

3mm Diameter 316 Stainless Ste
Round Bar

£2.48 p/m £2.98 p/m inc VAT

Same Day Despatch

Fast Delivery

Only applies to orders placed before
Other items not offering 'same day
despatch' must be ordered separatel
Orders containing an item that weigh
70kg are excluded. For more informa
about delivery click here.

Product Information SKU 1661

FREE Custom Cutting

Length:

mm

Please check your measurements carefully when ordering as custom cut items are non-returnable.
Please note that our cutting tolerances are -0 +3 mm

Size	Unit Price (ex VAT)	Unit Price (inc VAT)	Qt
1 metre	£2.45	£2.94	-
2 metres	£4.95	£5.94	-
3 Metres	£7.45	£8.94	-

The Adapter

- The adapter measures 84 mm in total length, with a hexagonal feature in the middle measuring 40 mm, and each end measuring 22 mm. Its design is simple which allows for mass production through the process of extrusion.
- IT has a 1 " BSP thread which will go into the valve as well as the 2"7 BSW thread to go into the existing pipe connection.
- The threads are secure ensuring water-tight connections

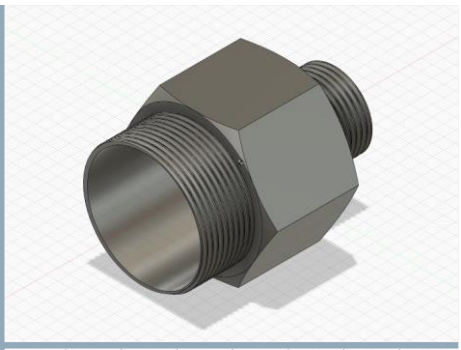

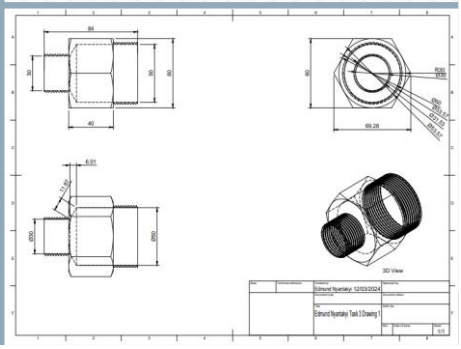

The Flange and the connecting pipework

These drawings show a representation of the pipe flanged end and a section of the pipe. This was to illustrate and determine how much pipework would need to be cut off. My adapter having a 22 millimetere male thread meands that the only adtional space required will be to accommodate the hexagonal feature which is only 40 mm therefore that is the amount required to be cut off

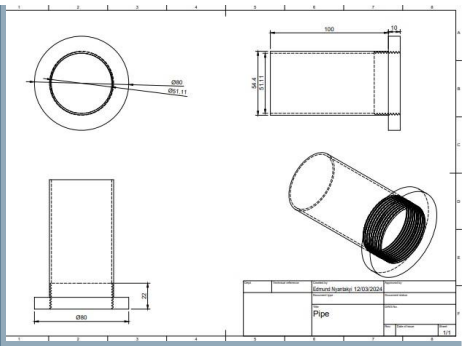

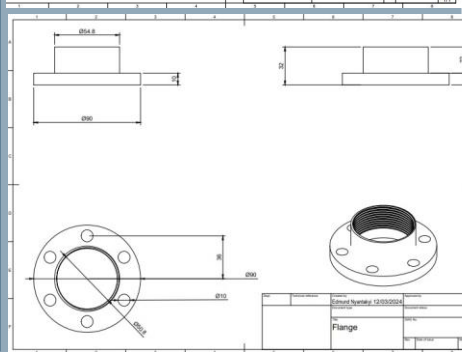

My Design Sketches in Full

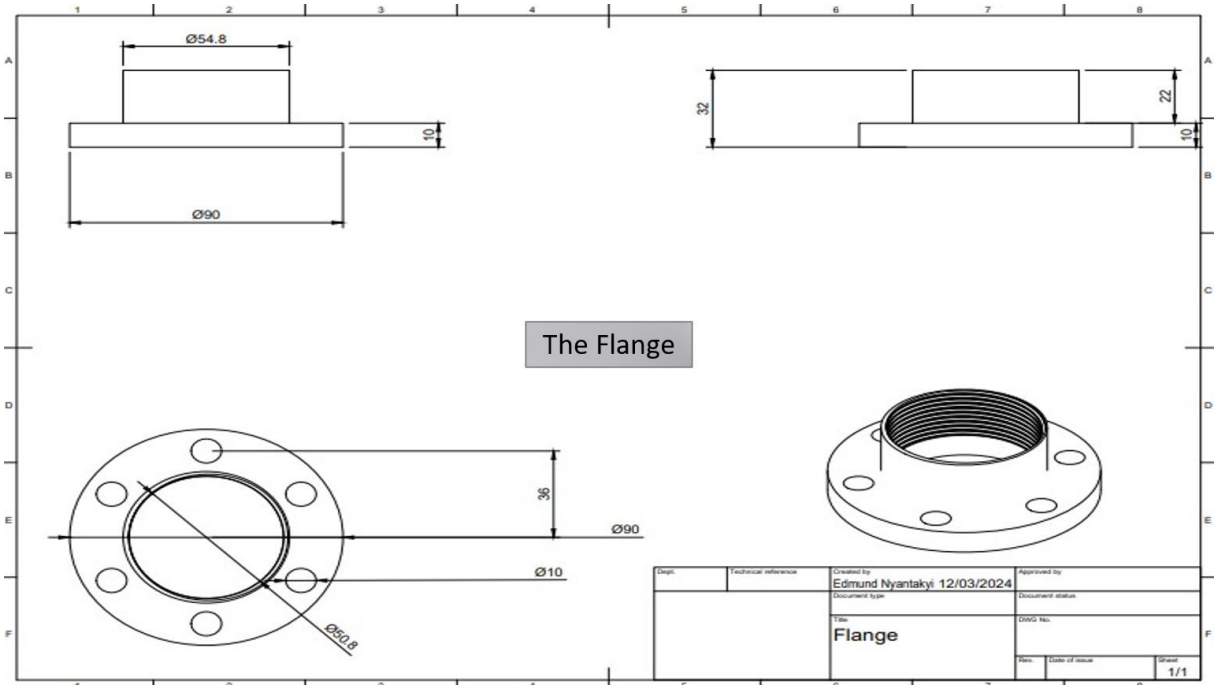

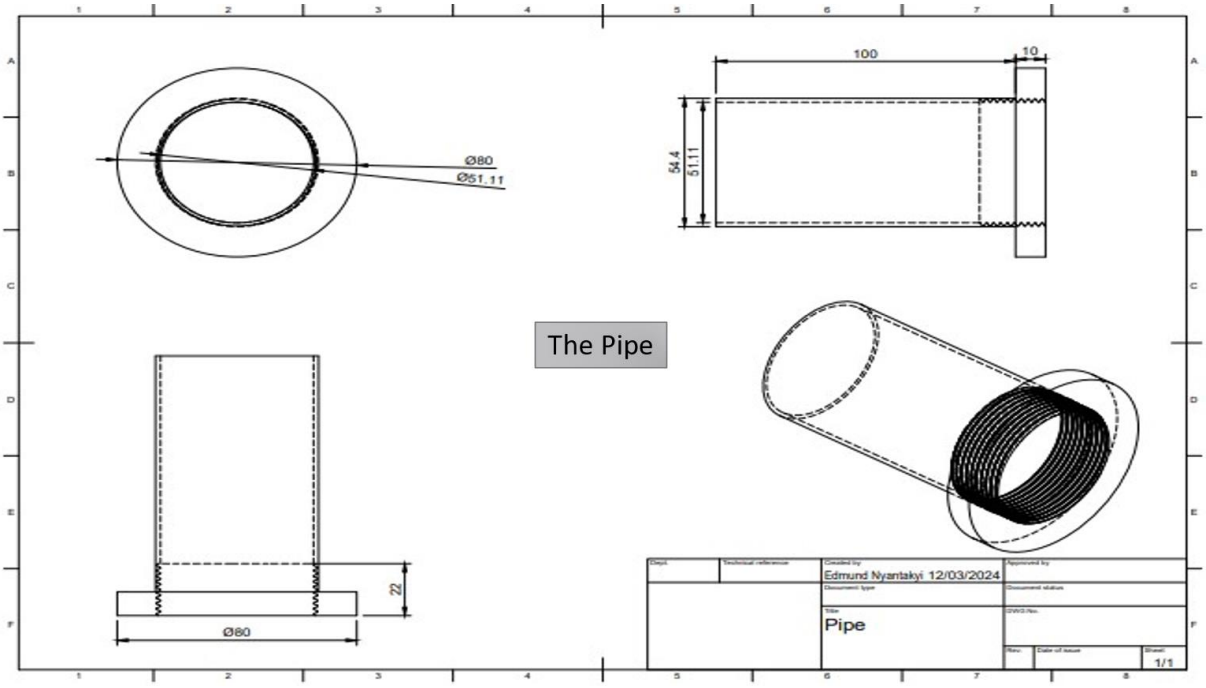
100
10
54.4
51.11
Ø80
Ø51.11
The Pipe
22
Ø80
Edmund Nyantakyi 12/03/2024
Pipe
1/1

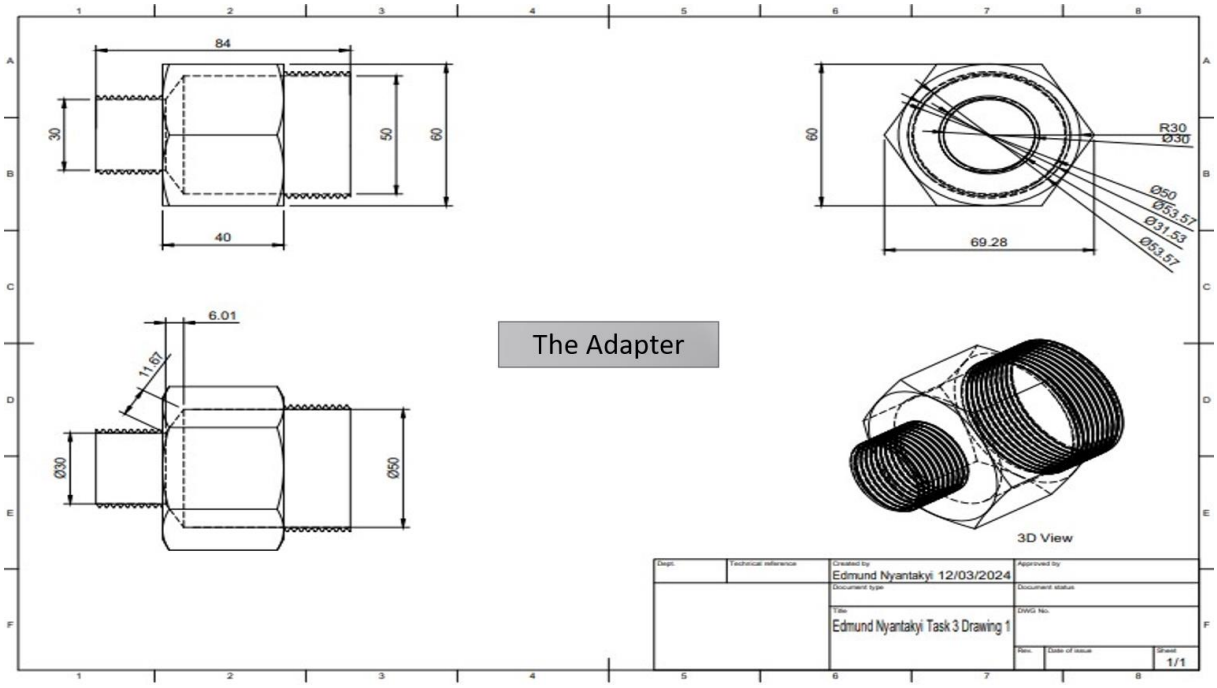
84
30
50
60
40
60
R30
Ø30
Ø50
Ø53.57
Ø31.53
Ø53.57
69.28
6.01
11.67
Ø30
Ø50
The Adapter
3D View
Edmund Nyantakyi 12/03/2024
Edmund Nyantakyi Task 3 Drawing 1
1/1

Things I would do differently.

If tasked to do things differently I would most likely research more manufacturing methods to see if there are better suited methods for the task at hand as well as researching more about British standard pipework threads and British standard Whitworth threads as due to the software that was used to design the adapter there is a possibility that the threads may be inaccurate.

Whilst desiginign the adpater I have reffered to the brief a numerous amount of times therefore I belive that Ihave adressed each of the requirements in the brief well aside from the issue I had with threads as per mentioned.

Thank you all so much for your time, Are there any questions?

Bibliography

(Design Sketches were made on fusion 360)

(Information Previously referenced in earlier tasks)

3mm Diameter 316 stainless steel round bar | metals4U

Employer-Set Project – Presentation Q & A Record (Task 4)

8730-13 T Level Technical Qualification in Engineering, Manufacturing, Processing and Control

8730-034 Employer-Set Project (Summer 2024)

Candidate name	<first name> <surname>
City & Guilds candidate No.	ABC1234
Date	DD/MM/YY

Provider name	<provider name>
City & Guilds Provider No.	999999a

Record observation notes below to inform external marking. **Notes must be detailed, accurate and differentiating.**

Tutor questions to candidate	Candidate responses
What did you find the most challenging aspect of the brief?	Designing the threads and getting them to be exactly 2 X 7 TPI.
What are your ideas on the best way to approach the design?	No changes except instead of extrusion maybe cutting and shaping.
What additional information would you have liked to have seen or would be useful for us to have provided in the brief?	Specifications of how long the adaptor should been (measurement).
How did you achieve watertight seal?	Threads firmly connect, however use of o ring would achieve this.

What materials were chosen to ensure food compliance?	316 Stainless Steel, however aluminium could have been used.

Any other comments

Tutor signature	Date
X _____	DD/MM/YY

If completing electronically, double click next to the ‘X’ to add an electronic signature once the record is **finalised**.

Get in touch

The City & Guilds Quality team are here to answer any queries you may have regarding your T Level Technical Qualification delivery.

Should you require assistance, please contact us using the details below:

Monday - Friday | 08:30 - 17:00 GMT

T: 0300 303 53 52

E: **technicals.quality@cityandguilds.com**

W: **http://www.cityandguilds.com/tlevels**

Web chat available **here**.

The T Level is a qualification approved and managed by the Institute for Apprenticeships and Technical Education.

Copyright in this document belongs to, and is used under licence from, the Institute for Apprenticeships and Technical Education, © 2024. 'T-LEVELS' is a registered trademark of the Department for Education. 'T Level' is a registered trademark of the Institute for Apprenticeships and Technical Education. 'Institute for Apprenticeships & Technical Education' and logo are registered trademarks of the Institute for Apprenticeships and Technical Education.

Every effort has been made to ensure that the information contained in this publication is true and correct at time of publication. However, City & Guilds products and services are subject to continuous development and improvement, and the right is reserved to change products and services from time to time. City & Guilds cannot accept responsibility for any loss or damage arising from the use of information in this publication.

City & Guilds is a trademark of City & Guilds Limited, a company registered in England and Wales (company number 16513878). City and Guilds Group, Giltspur House, 5–6 Giltspur Street, London EC1A 9DE